Nissan Motorsports Schematic Catalog

NISSAN

The Motorsports Parts Catalog features component breakdowns for many of the parts which are listed in the Motorsports Parts Catalogs. This book is a parts reference guide only and is not intended to be a service manual. Refer to the appropriate Nissan service manual (see below) for the necessary specifications to properly service any given part. The following books may also be of assistance in your racing efforts:

99996-M8012	HOW TO MODIFY YOUR NISSAN/DATSUN OHC ENGINE L-series engine mods for road racing, drag racing, off-road racing & improved street performance. Details complete mods to engine internals, carburetion & exhaust, plus parts interchange.
99996-M8013	HOW TO REBUILD YOUR NISSAN/DATSUN OHC ENGINE Troubleshooting & in-car repair. How to remove engine, tear down & inspect, recondition, assemble & install. Parts identification & interchange. Covers all 4 & 6 cylinder L-series engines for Nissan/Datsun cars & light trucks.
99996-M8014	MIKUNI PHH CARBURETOR SERVICE MANUAL Excellent manual for servicing and troubleshooting the Mikuni (Solex) sidedraft (PHH) carburetor. Includes sections on selection, construction, overhaul, maintenance, inspection, tune-up & adjustment.

All P/N's listed are stocked only by the Motorsports Department unless indicated with an asterisk (*). P/N's listed with an asterisk (*) are stock (OE) components available to the Nissan dealer through the regional parts depots.

All parts listed must be ordered from your local Nissan dealer. For further information concerning application or availability of parts listed in the Motorsports catalog, write or call:

Nissan Motorsports
PO Box 191
Gardena, California 90248-0191

(213) 538-2610 or (213) 719-5041

FAX # (213) 538-1462

It is highly recommended that a genuine Nissan factory service manual be obtained prior to any work being performed on your Nissan vehicle. These manuals can be purchased directly from:

Dyment Distribution Service
20026 Progress Drive
Strongsville, Ohio 44136

(800) 247-5321

Motorsports parts are sold "as is" without any warranty whatsoever. Implied warranties, including warranties of merchantability or fitness for a particular purpose, are excluded. The entire risk of quality and performance of such parts is with the buyer. Should such parts prove defective following their purchase, the buyer and not the manufacturer, distributor or retailer, assumes the entire cost of all necessary services or repair.
The Nissan vehicle and parts warranties are voided if the vehicle or part is used for competition or if they fail as a result of modification.
It is the competitor's responsibility to inspect and verify the dimensions of all parts prior to installation.
Inventory of certain items listed in the Nissan Motorsports Parts Catalog is limited and may not be available for immediate delivery.

PAGE	DESCRIPTION
3	MIKUNI/SOLEX CARBURETOR ASSY (EARLY STYLE)
5	MIKUNI/SOLEX CARBURETOR ASSY (LATE STYLE)
7	SSS/SU CARBURETOR ASSY (16010-22004)
9	SSS/SU LINKAGE ASSY
11	GX/SU CARBURETOR & LINKAGE ASSY
13	F5C56A TRANSMISSION HOUSING (1200, B210 & 210/B310)
15	F5C56A TRANSMISSION GEARS (1200, B210 & 210/B310)
17	F5C56A TRANSMISSION SHIFT MECHANISM (1200, B210 & 210/B310)
19	FS5C71A TRANSMISSION HOUSING (EARLY STYLE O/D 5-SPD)
21	FS5C71A TRANSMISSION GEARS (EARLY STYLE O/D 5-SPD)
23	FS5C71A TRANSMISSION SHIFT MECHANISM (EARLY STYLE O/D 5-SPD)
25	FS5C71B TRANSMISSION HOUSING (LATE STYLE O/D 5-SPD)
27	FS5C71B TRANSMISSION GEARS (LATE STYLE O/D 5-SPD)
29	FS5C71B TRANSMISSION SHIFT MECHANISM (LATE STYLE O/D 5-SPD)
31	F5C71B TRANSMISSION HOUSING (DIRECT-DRIVE 5-SPD)
33	F5C71B TRANSMISSION GEARS (DIRECT-DRIVE 5-SPD)
35	F5C71B TRANSMISSION SHIFT MECHANISM (DIRECT-DRIVE 5-SPD)
37	R190 DIFFERENTIAL (2-PINION)
39	FIA BRAKE CALIPER

MIKUNI/SOLEX CARBURETOR ASSY (EARLY STYLE)

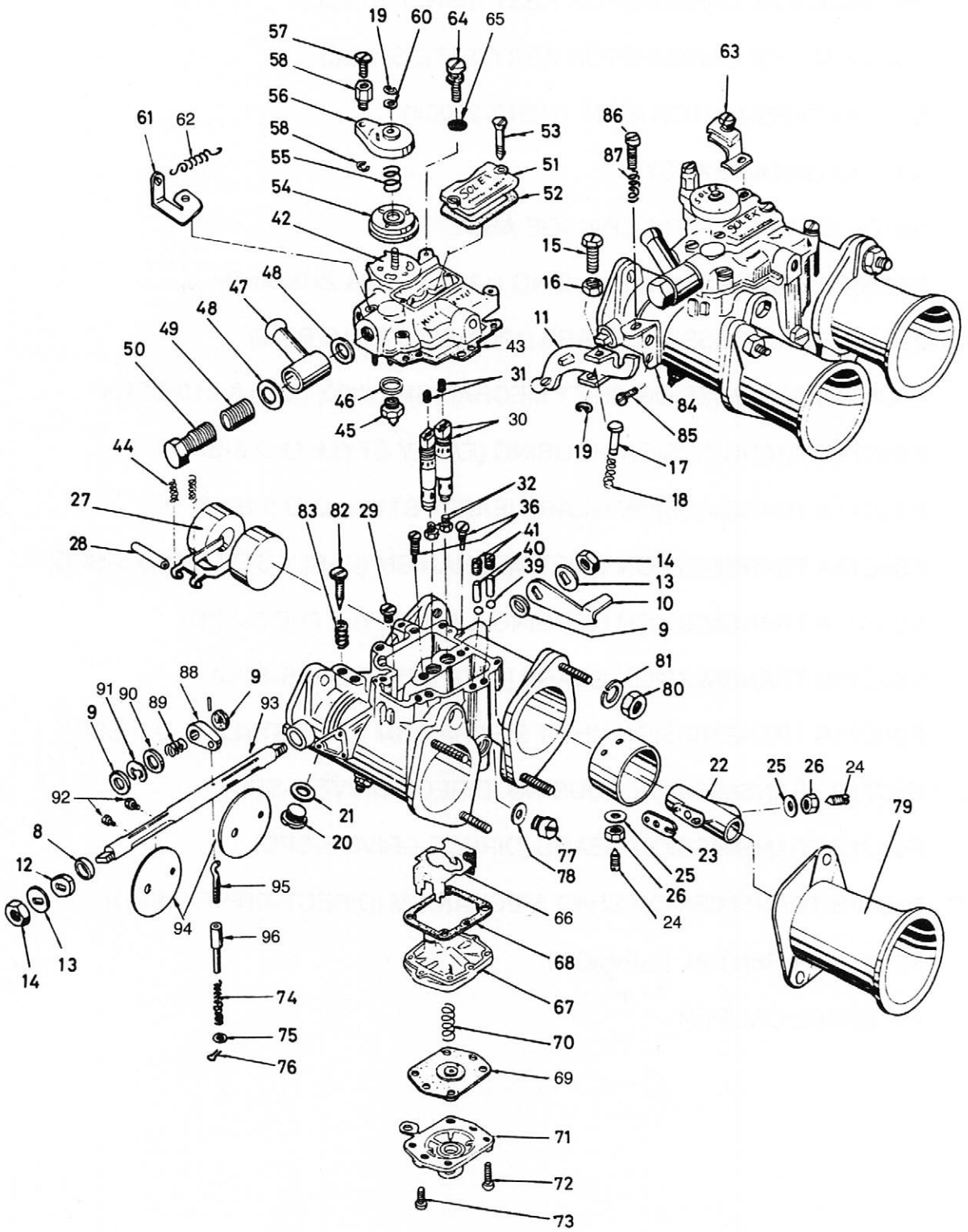

MIKUNI/SOLEX CARBURETOR ASSY (EARLY STYLE)

(44MM & 50MM W/TWO SCREWS RETAINING JET COVER)

ITEM	PART NUMBER	PART NAME	QTY
9	16263-25520	Seal	8/12
10	16133-25520*	Connecting Lever / F (U20 only)	1
11	16134-25520*	Throttle Lever Assy / R (U20 only)	1
12	16169-25520*	Nut	2/3
13	16126-25520*	Washer	4/6
14	16124-25520*	Nut	4/6
15	16114-25520*	Screw (U20 only)	1
16	16132-25520*	Nut (U20 only)	1
17	16184-25520*	Push Rod (U20 only)	1
18	16145-25520*	Adjust Screw Spring (U20 only)	1
19	16292-25520*	Snap Ring (U20 only)	1
20	16031-25520	Plug	4/6
21	16094-25520*	Washer	4/6
22	16013-25520	Inner Venturi (44PHH only)	NLA
23	16130-25520	Small Venturi Gasket	4/6
24	16016-25521	Venturi Set Screw	4/6
25	16015-25520*	Washer	8/12
26	16018-25520	Nut	8/12
27	16061-25520	Float Assy	2/4
28	16066-25520	Float Pin	NLA
29	16059-25520*	Starter Jet	2/4
30	16163-A0200	Jet Block (8)	4/6
	16163-25520	Jet Block (A)	4/6
	99996-S2000	Jet Block (OB)	4/6
	99996-S2001	Jet Block (OA)	4/5
31	16036-*****	Air Jet	4/6
32	16033-*****	Main Jet	4/6
	16034-*****	Main Jet	4/6
36	16189-*****	Pilot Jet	4/6
39	16219-25520	Pump Valve Ball	4/6
40	16285-25520*	Pump Valve Weight	4/6
41	16286-25520	Pump Passage Plug	NLA
42	16125-25520*	Float Chamber Cover	2/3
43	16064-25520*	Float Cover Gasket	2/3
44	16139-25520*	Spring	4/6
45	16101-25520	Needle Valve Assy (1.8mm)	2/3
46	16094-25520*	Washer	2/3
47	16111-25520*	Fuel Inlet	2/3
48	16076-25520*	Washer	4/6
49	16098-25520*	Filter Assy	2/3
50	16108-25520*	Filter Set Bolt	2/3
51	16113-25520*	Jet Chamber Cover	2/3
52	16299-25520*	Chamber Cover Gasket	2/3
53	16164-25520	Cover Set Screw	4/6
54	17638-25520	Starter Disc	2/3
55	17639-25520	Starter Spring	2/3
56	17640-25520*	Starter Cover	2/3
57	16241-25520	Bolt	NLA
58	16221-25520*	Cable Set Collar	2/3
59	16292-25520*	Snap Ring	4/6
60	16217-25520	Washer	2/3
61	16162-25520*	Spring Bracket	1
62	16160-25520*	Spring	1
63	16165-25520*	Bracket Assy	1
64	16185-25520*	Screw	8/12
65	16220-25520	Washer	8/12
66	16069-25520*	Separate Plate	2/3
67	17620-25520*	Pump Body	2/3
68	17618-25520*	Pump Body Gasket	2/3
69	17617-25520	Pump Body Diaphragm	2/3
70	16140-25520	Diaphragm Spring	2/3
71	17619-25520	Pump Cover Assy	2/3
72	16223-25523	Screw	8/12
73	16223-25521	Screw	NLA
74	16157-25520*	Pump Spring	2/3
75	16215-25520*	Washer	2/3
76	16091-25520*	Cotter Pin	2/3
77	16030-25520*	Pump Passage Plug	2/3
78	16029-25520	Washer	2/3
79	99996-S3001	50mm Velocity Stack (44PHH only)	4/6
	16244-25520	75mm Velocity Stack (44PHH only)	4/6
80	16131-25520	Nut	NLA
81	16273-25520	Lock Washer	8/12
82	16214-25520*	Idle Adjust Screw	4/6
83	16145-25520*	Adjust Screw Spring	4/6
84	16287-25520*	Stop Screw Bracket (U20 only)	1
85	16077-25520*	Screw	4/6
86	16129-25520*	Throttle Adjust Screw	2/3
87	16145-25520*	Adjust Screw Spring	6/9
88	16142-A0200	Lever Rod	2/3
89	16194-25520	Throttle Shaft Spring	NLA
90	16072-25520	Thrust Washer	2/3
91	16086-25520	Snap Ring	2/3
92	16121-25521	Screw	8/12
93	16122-25521	Throttle Shaft (44PHH only)	2/3
94	16119-25520	Throttle Valve (44PHH only)	NLA
95	16081-25521	Pump Rod	NLA
96	16143-A0200	Link	2/3

99996-M8014 MIKUNI PHH CARBURETOR SERVICE MANUAL
Excellent manual for servicing and troubleshooting the Mikuni (Solex) sidedraft (PHH) carburetor. Includes sections on selection, construction, overhaul, maintenance, inspection, tune-up & adjustment.

*****A complete listing of all outer venturis and carburetor jets (keys #31, #32, & #36) can be found in the Nissan Motorsports Parts Catalog.

MIKUNI/SOLEX 44MM PHH CARBURETOR (LATE STYLE)

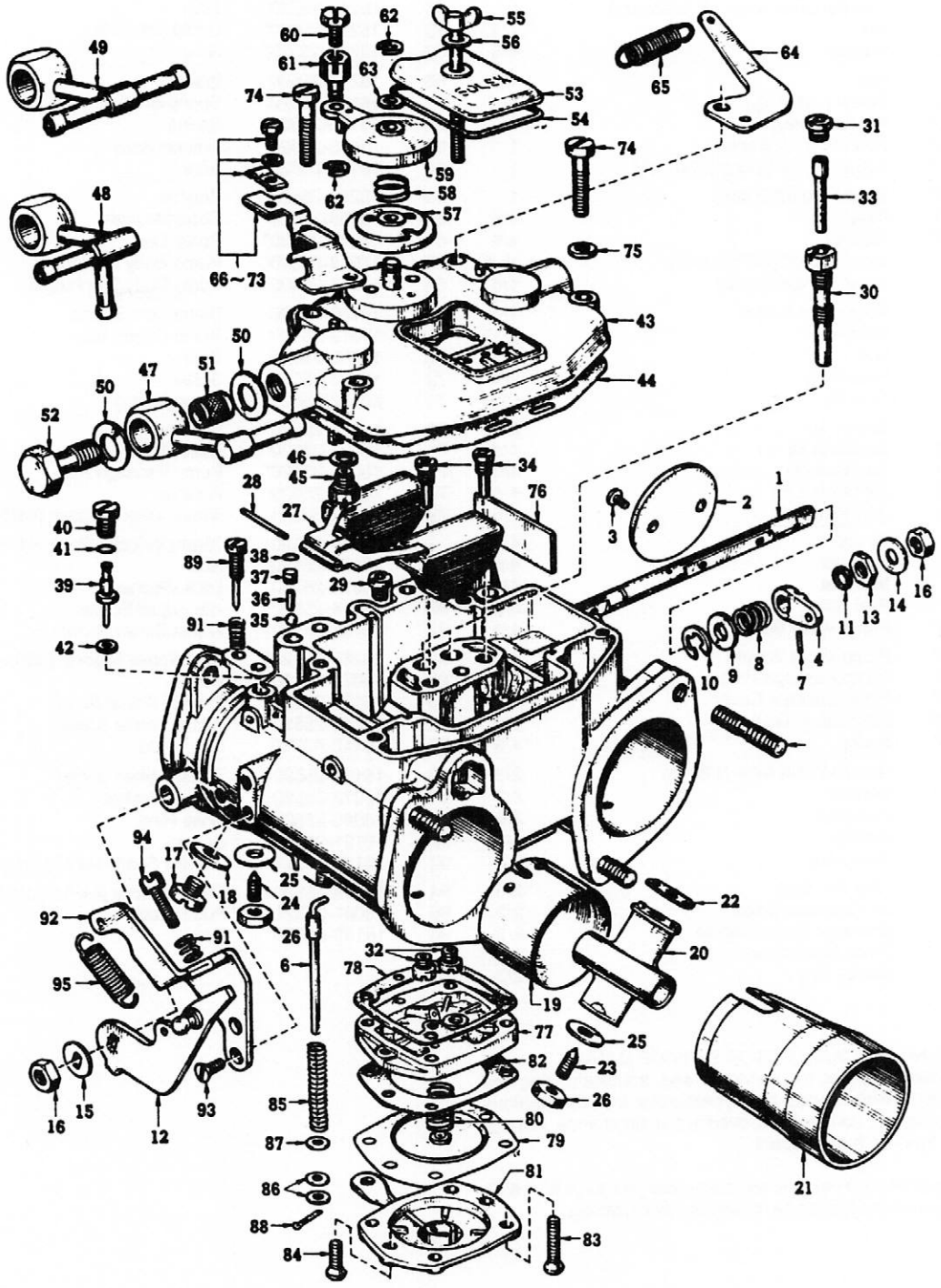

MIKUNI/SOLEX 44MM PHH CARBURETOR (LATE STYLE)

(40MM & 44MM W/SINGLE SCREW RETAINING JET COVER & NO EXTERNAL FLOAT ADJ)

ITEM	PART NUMBER	PART NAME	QTY
1	16122-A0200	Throttle Shaft (40PHH only)	2
2	16199-A0200	Throttle Valve (40PHH only)	4
3	16121-25720	Screw	8/12
4	16142-A0200	Lever Rod	2/3
5	16143-A0200	Link	2/3
6	16081-25720	Pump Rod	2/3
7	16224-25520	Stopper Pin	2/3
8	16194-14620	Throttle Shaft Spring	2/3
9	16072-25520	Thrust Washer	2/3
10	16086-25520	Snap Ring	2/3
11	16263-25520	Seal	8/12
12	16134-A0200	Throttle Valve Lever	2/3
13	16126-A0202	Washer	2/3
14	16126-A0200	Washer	2/3
15	16126-A0201	Washer	2/3
16	16124-25520*	Nut	4/6
17	16031-25520	Plug	4/6
18	16094-25520*	Washer	4/6
19	*****-*****	Outer Venturi	4/6
20	16013-A0200	Inner Venturi (40PHH only)	4
	16013-25520	Inner Venturi (44PHH only)	4/6
21	99996-S3001	50mm Velocity Stack (44PHH only)	4/6
	16244-25520	75mm Velocity Stack (44PHH only)	4/6
22	16130-25520	Small Venturi Gasket	4/6
23	16016-25520	Venturi Set Screw	8/12
24	16016-14620	Venturi Set Screw	4/6
25	16015-25520*	Washer	12/18
26	16018-25520	Nut	12/18
27	16061-A0200	Float Assy	2/3
28	16060-A0200	Float Pin	2/3
29	16059-A0201	Starter Jet	2/3
30	16163-A0200	Jet Block (8)	4/6
	16163-25520	Jet Block (A)	4/6
	99996-S2000	Jet Block (OB)	4/6
	99996-S2001	Jet Block (OA)	4/6
31	16036-*****	Air Jet	4/6
32	16033-*****	Main Jet	4/6
	16034-*****	Main Jet	4/6
33	16317-E4200	Emulsion Tube (M)	4/6
34	16189-*****	Pilot Jet	4/6
35	16219-25720	Pump Valve Ball	4/6
36	16285-25520*	Pump Valve Weight	4/6
37	16286-25720	Pump Passage Plug	4/6
38	16126-25720	Packing	4/6
39	16095-A0200	Pump Injector	4/6
40	16080-25720	Injector Set Screw	4/6
41	16126-25721	Packing	4/6
42	16191-25720	Gasket	4/6
43	16125-A0200	Float Chamber Cover	2/3
44	16064-A0200	Float Cover Gasket	2/3
45	16101-14620	Needle Valve Assy (1.8mm)	2/3
	99996-M1000	Needle Valve Assy (2.0mm)	2/3
46	16094-25520*	Washer	2/3
47	N/A	Fuel Inlet / Rear	
48	N/A	Fuel Inlet / Center	
49	N/A	Fuel Inlet / Front	
50	16076-25520*	Washer	4/6
51	16098-25520*	Filter Assy	2/3
52	16108-25520*	Filter Set Bolt	2/3
53	16113-A0200	Jet Chamber Gasket	2/3
54	16299-A0200	Chamber Cover Gasket	2/3
55	16164-A0200	Cover Set Screw	2/3
56	16220-A0200	Washer	2/3
57	17638-A0200	Starter Disc	2/3
58	17639-25520	Starter Spring	2/3
59	17640-A0200	Starter Cover	2/3
60	16241-A0200	Bolt	2/3
61	16221-A0200	Cable Set Collar	2/3
62	16292-25520*	Snap Ring	4/6
63	16217-25520	Washer	2/3
64	16162-A0200	Spring Bracket	1
65	16160-25520*	Spring	1
66	N/A	Bracket Assy	
67	16046-A0200	Cable Clamp	1
68	N/A	Set Screw	
69	N/A	Washer	
70	N/A	Cable Bracket	
71	N/A	Cable Bracket	
72	16029-A0200	Washer	8/12
73	N/A	Nut	
74	16185-A0200	Screw	8/12
75	16220-25520	Washer	8/12
76	16069-A0200	Separate Plate	2/3
77	17620-25720	Pump Body	2/3
78	17618-25720	Pump Body Gasket	2/3
79	17617-25720	Pump Diaphragm Assy	2/3
80	16140-25520	Diaphragm Spring	2/3
81	17619-25520	Pump Cover Assy	2/3
82	16191-25721	Gasket	2/3
83	16223-25720	Screw	8/12
84	16223-25721	Screw	4/6
85	16157-25520	Pump Spring	2/3
86	16215-A0200	Washer	4/6
87	16215-25520	Washer	4/6
88	16091-25520	Cotter Pin	2/3
89	16214-25520	Idle Adjust Screw	4/6
	16147-E6600	Idle Screw Cap	4/6
91	16145-25520	Adjust Screw Spring	6/9
92	16287-A0200	Stop Screw Bracket	2/3
93	16077-A0200	Screw	4/6
94	16129-25520	Throttle Adjust Screw	2/3
95	16160-A0200	Throttle Return Spring	2/3

99996-M8014 MIKUNI PHH CARBURETOR SERVICE MANUAL
Excellent manual for servicing and troubleshooting the Mikuni (Solex) sidedraft (PHH) carburetor. Includes sections on selection, construction, overhaul, maintenance, inspection, tune-up & adjustment.

*****A complete listing of all outer venturis (key #19) and carburetor jets (keys #31, #32, & #34) can be found in the Nissan Motorsports Parts Catalog.

SSS/SU CARBURETOR ASSY (EARLY STYLE)

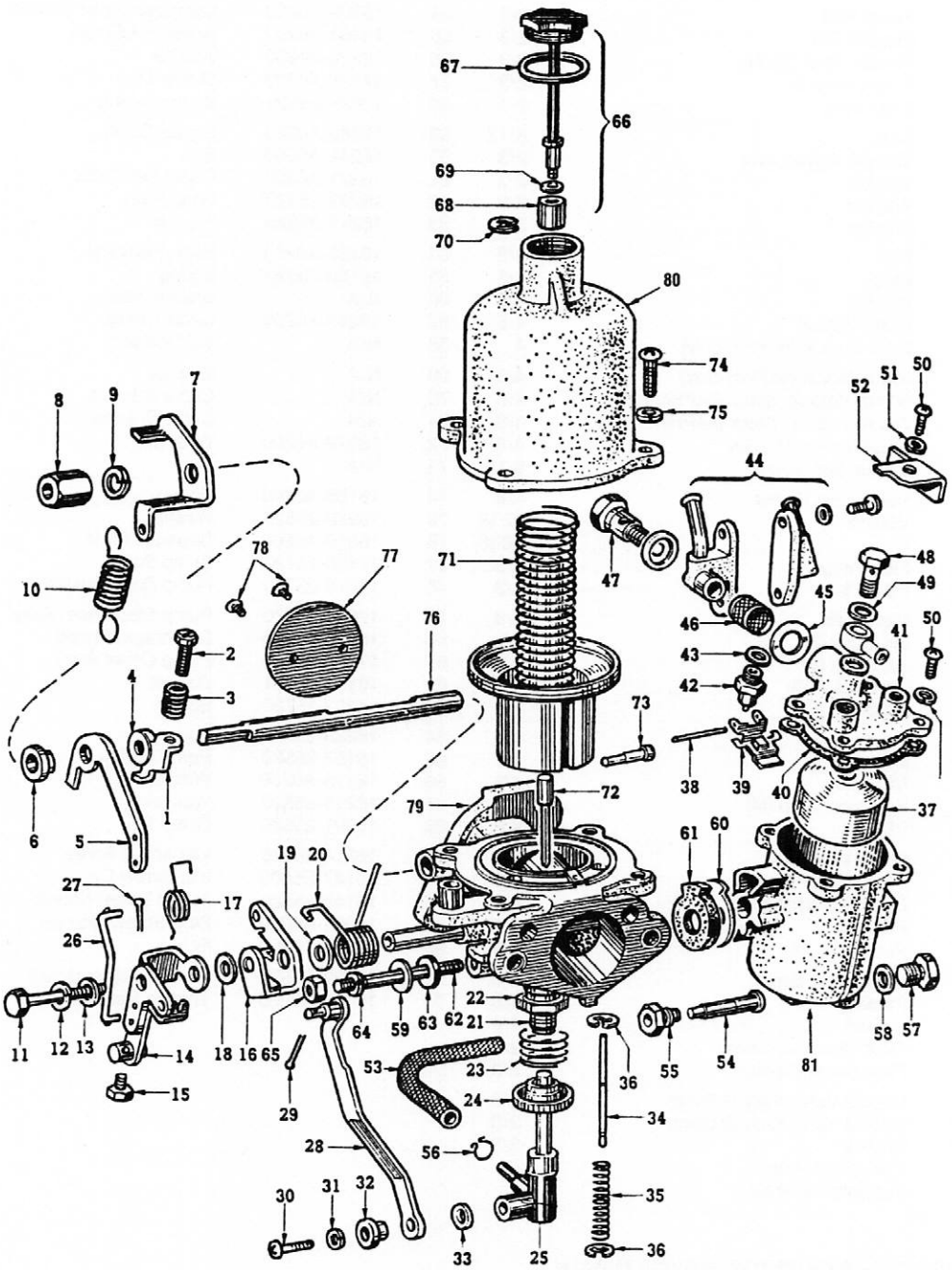

SSS/SU CARBURETOR ASSY (EARLY STYLE)

ITEM	PART NUMBER	PART NAME	QTY
	16010-22004	SSS/SU Carburetor Set	1
1	16127-22015	Adjust Lever / F	1
	16127-22016	Adjust Lever / R	1
2	16114-22015	Throttle Adjust Screw	2
3	16193-10400*	Throttle Adjust Screw Spring	2
4	16084-58000*	Washer	2
5	16277-22010	Lever	2
6	16239-14610*	Sleeve	2
7	16134-22012	Throttle Lever / F	1
	16134-22013	Throttle Lever / R	1
8	16214-22011	Nut	2
9	23109-30000*	Lock Washer	2
10	16194-22011	Throttle Return Spring	2
11	16185-22015*	Bolt	2
12	16076-14610*	Lock Washer	2
13	16217-10401*	Washer	2
14	16238-22015	Choke Lever / F	1
	16238-22016	Choke Lever / R	1
15	16185-22016*	Bolt	2
16	16147-14611*	Choke Connecting Plate / F	1
	16147-73411*	Choke Connecting Plate / R	1
17	16157-14610*	Connecting Spring / F	1
	16157-73410*	Connecting Spring / R	1
18	16116-14610*	Sleeve	2
19	16072-14610*	Washer	2
20	16190-H2710*	Return Spring / F	1
	16190-H2711*	Return Spring / R	1
21	16351-10400*	Nozzle Sleeve	2
22	16027-10400*	Nozzle Sleeve Screw	2
23	16145-10400*	Idle Adjust Screw Spring	2
24	16144-25610*	Idle Adjust Nut	2
25	16355-22015	Nozzle	2
26	16248-22010	Connecting Rod / F	1
	16248-22011	Connecting Rod / R	1
27	16091-10560*	Cotter Pin	2
28	16147-14710*	Connecting Plate / F	1
	16147-78110	Connecting Plate / R	1
29	16091-10560*	Cotter Pin	2
30	22103-E4310*	Screw	2
31	22156-85060*	Lock Washer	2
32	16123-14610*	Sleeve	2
33	22185-50000*	Washer	2
34	16324-10400*	Piston Lifter	2
35	16325-10400*	Piston Lifter Spring	2
36	16326-10400*	Snap Ring	4
37	16061-10400*	Float Assy	2
38	16066-25610*	Float Lever Pin	2
39	16062-10400*	Float Lever	2
40	16064-22010*	Float Chamber Gasket	2
41	16125-10400*	Float Chamber Cover	2
42	16101-10400*	Needle & Seat Assy	2
43	16130-22010*	Washer	2
44	16111-66810	Fuel Pipe Assy / F	1
	16111-22017	Fuel Pipe Assy / R	1
45	16094-76500*	Washer	4
46	16098-73401*	Filter Assy	2
47	16108-18010*	Inlet Bolt	2
48	16331-10400*	Overflow Tube Bolt	2
49	16335-14610*	Gasket	4
50	16131-19915*	Screw	8
51	23502-30000*	Lock Washer	8
52	16229-22010	Fuel Return Bracket	1
53	16356-25610*	Fuel Tube	2
54	16357-12210*	Sleeve	2
55	16359-12210*	Sleeve Nut	2
56	16358-E4310*	Clip	4
57	16031-A8710*	Drain Plug	2
58	16060-10400*	Gasket	2
59	16322-22010	Bolt	2
60	16217-25610*	Washer	2
61	16227-A8710	Adapter / F	1
	16227-A8711	Adapter / R	1
62	16228-A8710	Washer	2
63	16218-25610*	Washer	2
64	22203-50000*	Lock Washer	2
65	16088-25610	Nut	2
66	16341-25610*	Oil Cap Nut Assy	2
67	16342-10400*	Packing	2
68	16343-12210*	Plunger	2
69	16344-10400*	Washer	2
70	16345-10400*	Snap Ring	2
71	16346-12210*	Spring	2
	16347-10400*	Packing	2
72	16354-22011	Needle / M66	2
73	16219-22015*	Needle Screw	2
74	16131-19915*	Screw	8
75	23502-30000*	Lock Washer	8
76	16122-22016	Throttle Shaft	2
77	16120-22010	Throttle Valve	2
78	16121-22015	Screw	4
79	16118-22015	Throttle Chamber / F	1
	16118-22016	Throttle Chamber / R	1
80	16340-22015	Suction Chamber	2
81	16011-22015	Float Chamber / F	1
	16011-22016	Float Chamber / R	1

SSS/SU LINKAGE ASSY

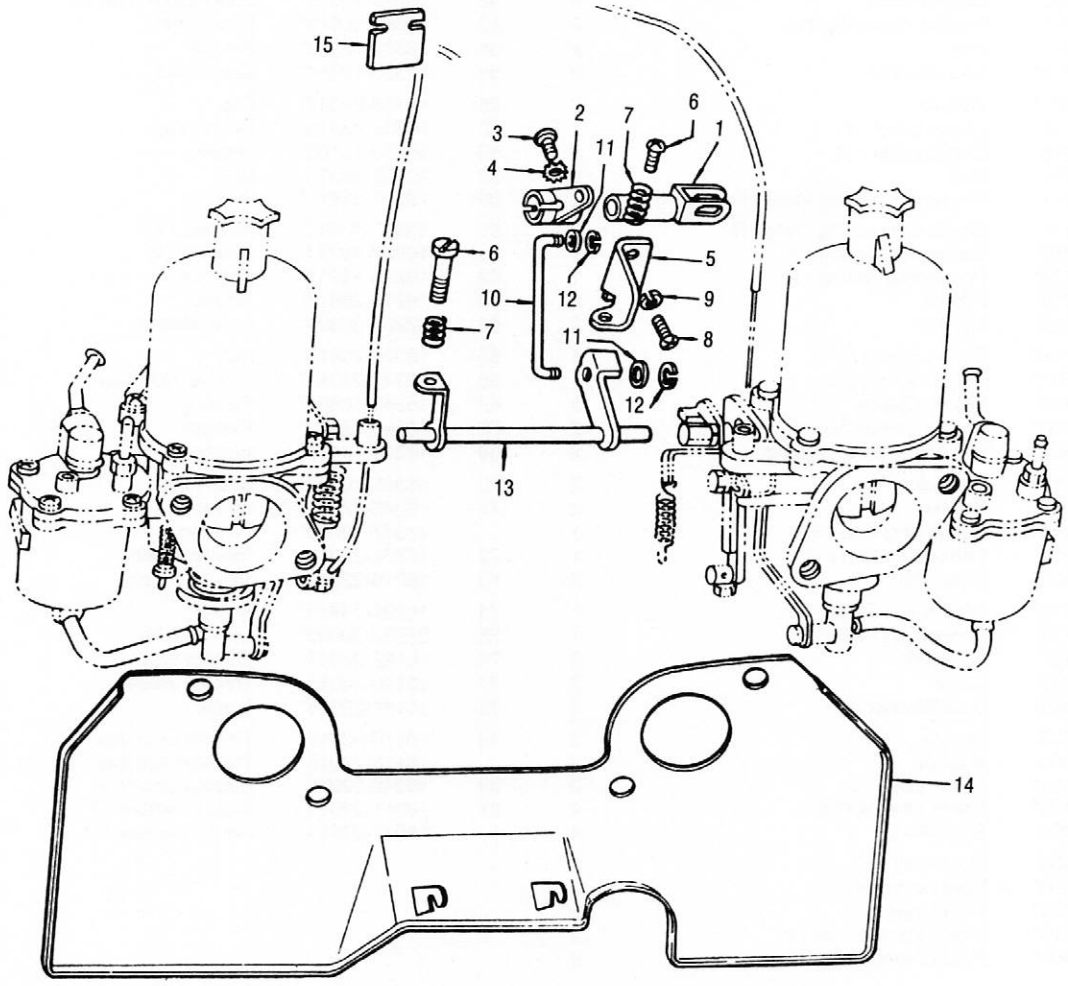

SSS/SU LINKAGE ASSY

ITEM	PART NUMBER	PART NAME	QTY
1	16361-22000	Auxiliary Throttle Shaft	1
2	16365-U0800	Auxiliary Throttle Shaft Arm	1
3	08330-51612	Screw	1
4	08916-43510	Washer	1
5	16794-22000	Bracket	1
6	16379-22000	Screw	2
7	16378-22000	Spring	2
8	08310-51012	Screw	2
9	08915-13510	Lock Washer	2
10	16371-22001	Connecting Rod	1
11	16084-22000	Washer	2
12	16179-22000	'E' Ring	2
13	16380-K1400	Throttle Shaft Assy	1
14	14330-U0800	Heat Shield	1
15	18418-A8700	Choke Wire Clamp	1

GX/SU CARBURETOR ASSY (LATE STYLE)

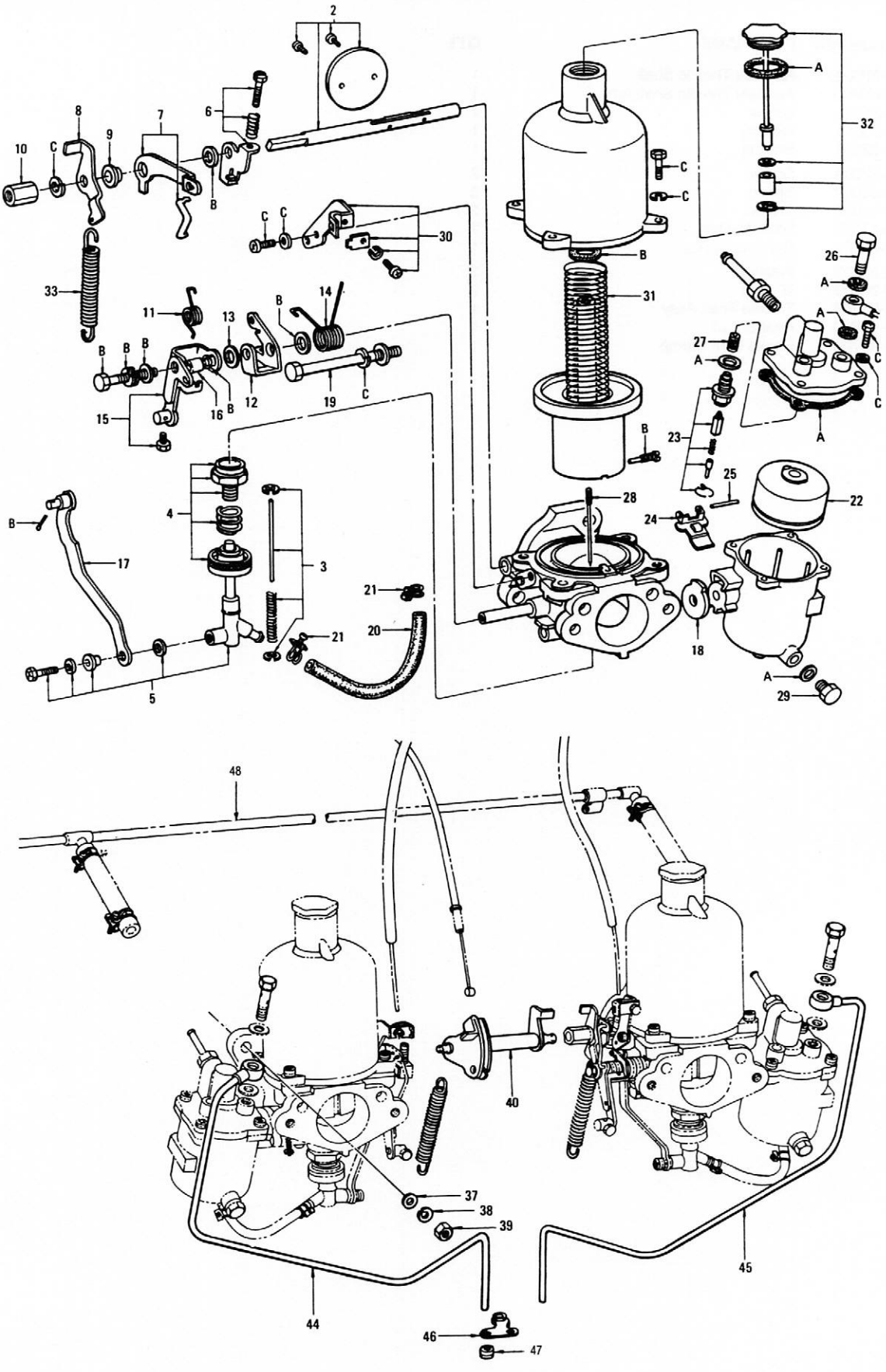

GX/SU CARBURETOR ASSY (LATE STYLE)

ITEM	PART NUMBER	PART NAME	QTY
1	16010-H2336	GX/SU Carburetor Assy / F	1
	16010-H2337	GX/SU Carburetor Assy / R	1
2	16122-H2310	Throttle Assy	2
3	16324-H2310	Piston Lifter Assy	2
4	16144-H2311*	Idle Adjust Nut Assy	2
5	16355-H2311	Nozzle	2
6	16127-H2310	Throttle Adjust Plate Assy / F	1
	16127-H2311	Throttle Adjust Plate Assy / R	1
7	16277-H2312	1st Idle Lever Assy / F	1
	16277-H2315	1st Idle Lever Assy / R	1
8	16134-H2310	Throttle Lever Assy / F	1
	16134-H2313	Throttle Lever Assy / R	1
9	16083-58000	Sleeve	2
10	16214-25610*	Nut	2
11	16190-H2710*	Starter Return Spring (B)	1
	16190-H2711*	Starter Return Spring (A)	1
12	16147-14611*	Cam Plate (B)	1
	16147-73411*	Cam Plate (A)	1
13	16116-H2310*	Sleeve (B)	2
14	16157-14610*	Connecting Spring (B)	1
	16157-73410*	Connecting Spring (A)	1
15	16238-H2310	Choke Lever Assy / F	1
	16238-H2311	Choke Lever Assy / R	1
16	16116-H2310*	Sleeve	2
17	16147-H2310	Connecting Plate / F	1
	16147-H2311	Connecting Plate / R	1
18	16227-H2310	Adapter / F	1
	16227-H2311	Adapter / R	1
19	16322-E3210	Bolt	2
20	16356-25610*	Rubber Fuel Pipe	2
21	16358-E4310*	Fuel Pipe Clip	4
22	16061-10400*	Float Assy	2
23	16101-18010	Needle & Seat Assy	2
24	16062-H2310	Float Lever / F	1
	16062-H2710	Float Lever / R	1
25	16066-25610*	Float Pin	2
26	16331-10400*	Overflow Tube Bolt	2
27	16098-H7860*	Filter	2
28	16554-H2316	Needle / M83	2
29	16031-A8710*	Drain Plug	2
30	16418-H2310	Choke Clamp / F	1
	16419-H2311	Choke Clamp / R	1
31	16346-10615*	Spring	2
32	16341-25610*	Oil Cap Nut Assy	2
33	16194-H2312	Throttle Return Spring	2
34	16455-H2310*	Gasket Kit	1
35	16475-H2310*	Screw & Washer Kit (B)	1
36	16465-H2310*	Screw & Lock Washer Kit (A)	1
37	08915-4381A*	Washer	4
38	08915-13810	Lock Washer	4
39	08911-20810	Nut	4
40	16361-H2300	Throttle Shaft Assy	1
41	16376-H2300	Accelerator Cable Bracket	1
42	08915-13510	Washer / Cable Bracket	2
43	08460-51012*	Screw / Cable Bracket	2
44	16031-H2300	Overflow Tube / F	1
45	16031-H2301	Overflow Tube / R	1
46	14012-22002	Overflow Tube Bracket	1
47	18455-30000*	Rubber	2
48	17523-H2302	Fuel Tube	1

F5C56A TRANSMISSION HOUSING

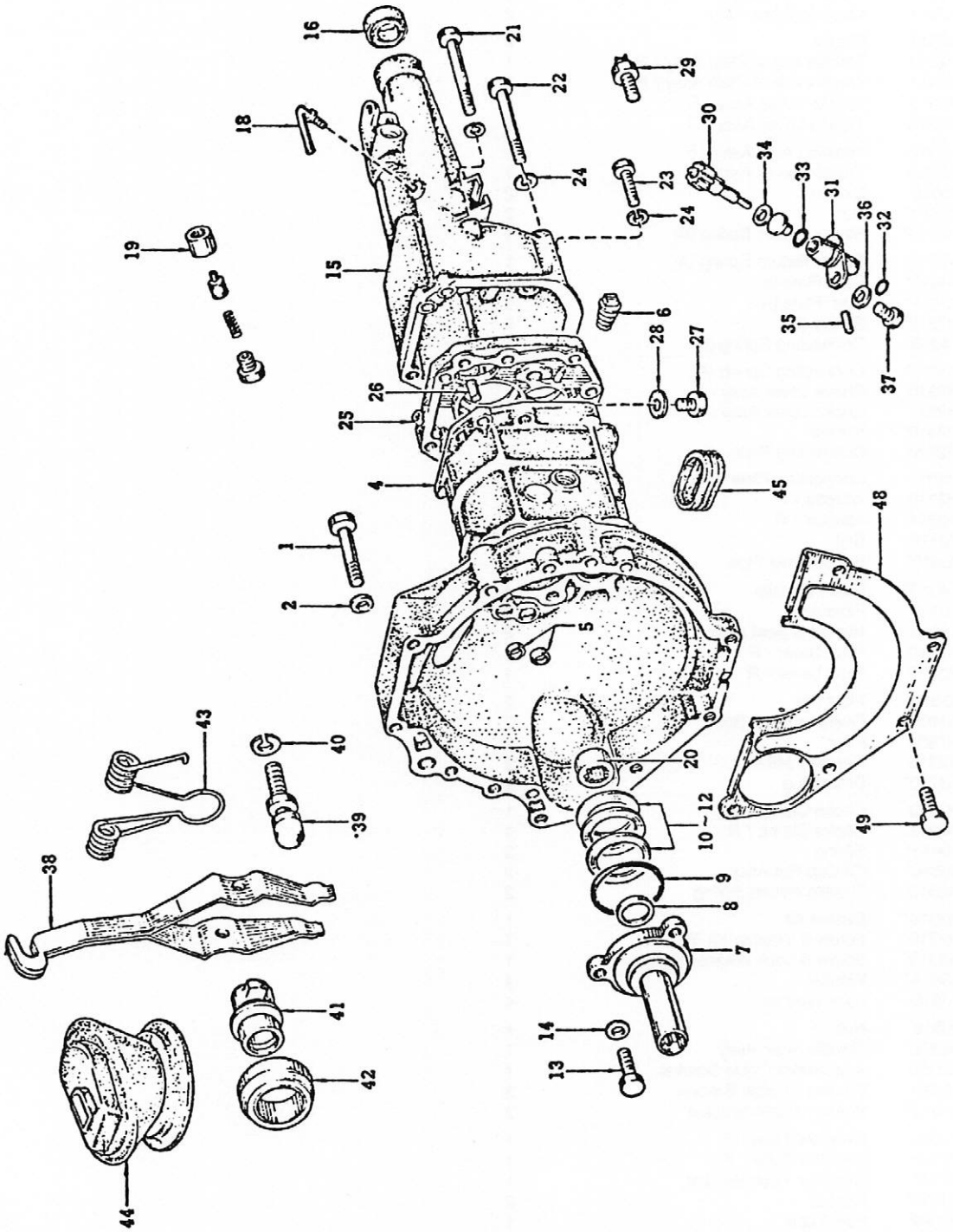

ITEM	PART NUMBER	PART NAME	QTY
1	08120-85510*	Bolt	6
2	08915-33810*	Lock Washer	6
3	08114-0201D*	Bolt	3
4	C2100-H6231	Case Assy	1
	32219-G1000*	Counter Shaft Needle Brng	1
5	32102-18000*	Plug	2
6	00931-1081A*	Fill Plug	1
7	32110-H1000*	Cover Assy	1
8	32113-H3100*	Front Cover Oil Seal	1
9	32112-18000*	Front Cover 'O' Ring	1
10	32208-18001*	Shim (0.2mm)	A/R
11	32208-18002*	Shim (0.1mm)	A/R
12	32208-18003*	Shim (0.3mm)	A/R
13	08120-8251A*	Bolt	3
14	08915-13810	Lock Washer	3
15	32130-H7230	Tail Housing	1
16	32136-G1001*	Rear Oil Seal	1
17	32150-H5000*	Oil Retainer	1
18	38322-H7201	Breather Assy	1
19	32140-24900*	Return Spring Bushing	1
20	32351-H7200	Needle Brng	1
21	08120-80510	Bolt	NLA
22	08120-8011A*	Bolt	1
23	08120-85510*	Bolt	4
24	08915-33810*	Lock Washer	8
25	32137-H7200	Adapter Plate Assy	1
26	32133-18000*	Dowel Pin	2
27	08931-44210*	Drain Plug	1
28	32155-H7200	Copper Gasket	1
29	32005-K1004*	Reverse Lamp Switch	1
30	32703-27720	Speedo Pinion (15t)	1
	32703-27721	Speedo Pinion (16t)	1
	32703-27722	Speedo Pinion (17t)	1
	32703-27723	Speedo Pinion (18t)	1
	32703-27724	Speedo Pinion (19t)	1
31	32707-18000	Sleeve Assy (15t/16t/17t)	1
	32707-H1000*	Sleeve Assy (18t/19t)	1
32	32709-18000*	'O' Ring	1
33	32710-18000*	'O'Ring	1
34	32708-18000*	Washer	1
35	32712-18000*	Retaining Pin	1
36	08915-1362A*	Lock Washer	2
37	08110-61462*	Bolt	2
38	30531-H1600*	T/O Brng Arm	1
39	30537-21010*	Ball Pin	1
40	08915-2402A*	Lock Washer	1
41	30501-H7500*	T/O Brng Sleeve	1
42	30502-21000*	T/O Brng	1
43	30533-H1001*	Return Spring	1
44	30543-H1600*	Dust Cover / Upper	1
45	30542-H1600*	Dust Cover / Lower	1
46	08120-85510*	Bolt	6
47	08915-33810*	Lock Washer	6
48	30422-18000*	Cover	1
49	08110-6105A*	Bolt	3
	08915-1362A*	Lock Washer	3

F5C56A TRANSMISSION GEARS

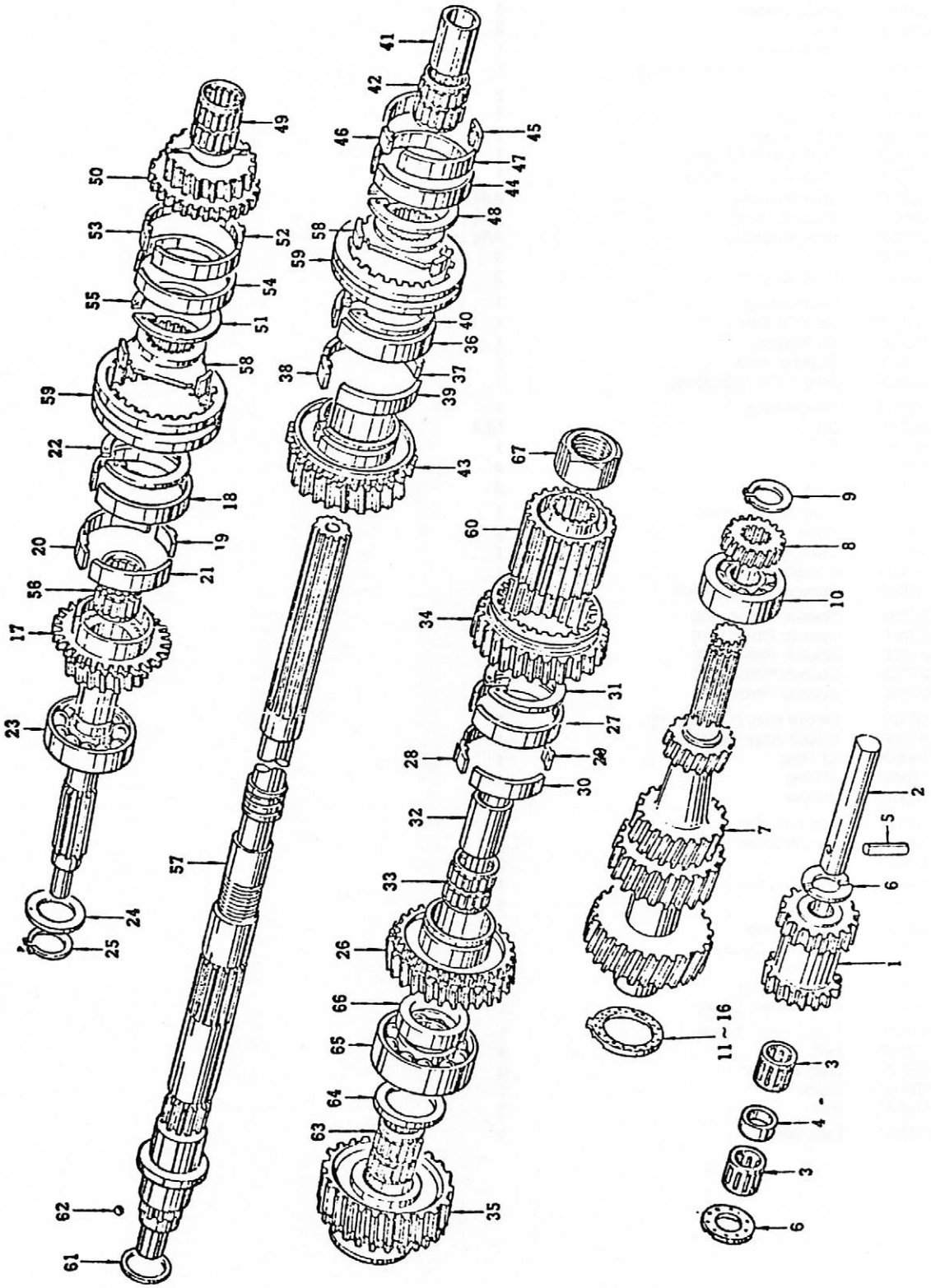

F5C56A TRANSMISSION GEARS (1200, B210 & 210/B310)

ITEM	PART NUMBER	PART NAME	QTY
1	32282-H7200	Reverse Idler Gear (15t/17t)	1
2	32281-H7200	Reverse Idler Shaft	1
3	32283-H7201	Reverse Idler Needle Brng	2
4	32285-H7201	Needle Brng Spacer	NLA
5	32293-73200*	Retaining Pin	1
6	32284-H7201	Reverse Idler Thrust Washer	2
7	32213-H7201	Counter Gear (18t/23t/28t/29t)	1
	32213-H7220	C/R Counter Gear (18t/21t/23t/25t)	1
8	32220-H7200	1st Gear / Counter Shaft (13t)	1
9	32221-H7201	Snap Ring	1
10	32223-H8500*	Counter Shaft Brng	1
11	32224-H7200*	Thrust Washer (2.30mm/2.35mm)	A/R
12	32224-H7201*	Thrust Washer (2.35mm/2.40mm)	A/R
13	32224-H7202*	Thrust Washer (2.40mm/2.45mm)	A/R
14	32224-H7203*	Thrust Washer (2.45mm/2.50mm)	A/R
15	32224-H7204*	Thrust Washer (2.50mm/2.55mm)	A/R
16	32224-H7205*	Thrust Washer (2.55mm/2.60mm)	A/R
17	32200-H7200	Main Drive Gear (19t)	1
	32202-H7220	C/R Main Drive Gear (23t)	1
18	32611-H7200	Synchro Ring	1
19	32612-H7200	Thrust Block	1
20	32613-H7200	Anchor Block	1
21	32614-H7200	Brake Band	2
22	32616-H7200	Circlip	1
23	32203-E9800	Main Drive Gear Brng	1
24	32205-18000*	Main Drive Gear Thrust Washer	1
25	32204-18000*	Main Drive Gear Snap Ring	1
26	32230-H7200	1st Gear / Main Shaft (32t)	1
27	32611-H7200	Synchro Ring	1
28	32617-H7200	Thrust Block	1
29	32613-H7200	Anchor Block	1
30	32614-H7200	Brake Band	1
31	32616-H7200	Circlip	1
32	32253-18000*	Main Shaft Bushing	1
33	32264-24900*	Main Shaft Needle Brng	1
34	32245-H7200	Reverse Gear / Main Shaft (39t)	1
35	32250-H7200	2nd Gear / Main Shaft (28t)	1
36	32611-H7200	Synchro Ring	1
37	32612-H7200	Thrust Block	1
38	32613-H7200	Anchor Block	1
39	32614-H7200	Brake Band	2
40	32616-H7200	Circlip	1
41	32253-18000*	Main Shaft Bushing	1
42	32264-24900*	Main Shaft Needle Brng	1
43	32260-H7200	3rd Gear / Main Shaft (25t)	1
	32262-H7220	C/R 3rd Gear / Main Shaft (27t)	1
44	32611-H7200	Synchro Ring	1
45	32612-H7200	Thrust Block	1
46	32613-H7200	Anchor Block	1
47	32614-H7200	Brake Band	2
48	32616-H7200	Circlip	1
49	32264-24900*	Needle Brng	1
50	32270-H7201	4th Gear / Main Shaft (23t)	1
	32272-H7220	C/R 4th Gear / Main Shaft (25t)	1
51	32611-H7200	Synchro Ring	1
52	32612-H7200	Thrust Block	1
53	32613-H7200	Anchor Block	1
54	32614-H7200	Brake Band	2
55	32616-H7200	Circlip	1
56	32272-18000*	Needle Brng	1
57	32241-H7200	Main Shaft	1
58	32605-H7200	Synchro Hub (2nd/3rd & 4th/5th)	2
59	32606-H7200	Coupling Sleeve	2
60	32604-H7200	Synchro Hub (Rev/1st)	1
61	32265-H7200*	Synchro Hub Thrust Washer	1
62	32720-14600*	Steel Ball	1
63	32272-18000*	Main Shaft Pilot Brng	1
64	32246-G1000*	Main Shaft Thrust Washer	1
65	32273-G1000*	Main Shaft Ball Brng	1
66	32248-H7200	Main Shaft Thrust Washer	1
67	32354-H7201	Nut	1
68	32219-G1000*	Bearing	1

F5C56A TRANSMISSION SHIFT MECHANISM

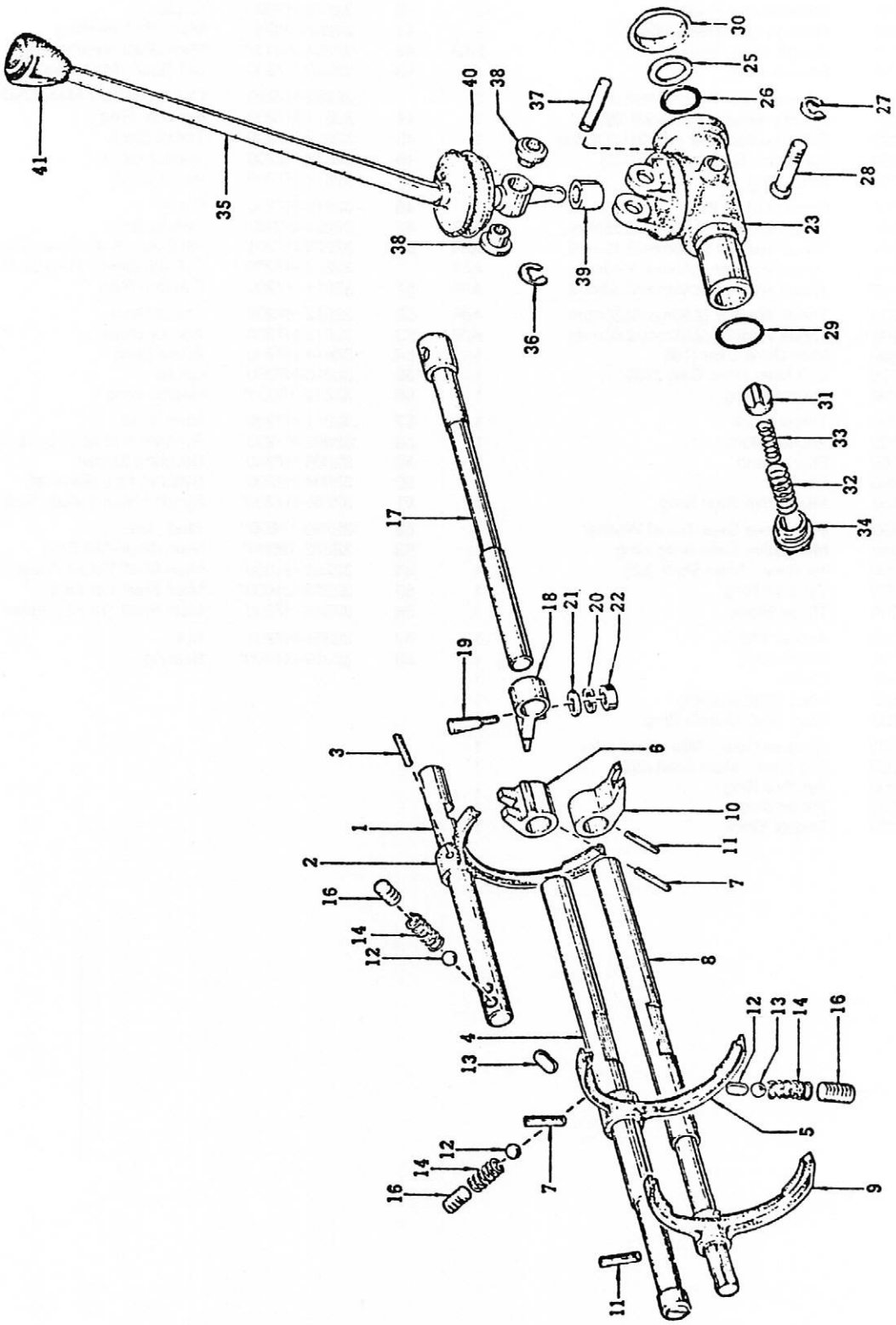

F5C56A TRANSMISSION SHIFT MECHANISM (1200, B210 & 210/B310)

ITEM	PART NUMBER	PART NAME	QTY
1	32816-H7200	Shift Rod (Rev/1st	1
2	32819-H7200	Shift Fork (Rev/1st)	1
3	32293-73200*	Retaining Pin	1
4	32801-H7200	Shift Rod (2nd/3rd)	1
5	32805-H7200	Shift Fork (2nd/3rd)	1
6	32813-H7200	Bracket (2nd/3rd)	1
7	32293-73200*	Retaining Pin	2
8	32809-H7200	Shift Rod (4th/5th)	1
9	32805-H7200	Shift Fork (4th/5th)	1
10	32382-H7200	Bracket (4th/5th)	1
11	32293-73200*	Retaining Pin	2
12	32829-26760*	Check Ball	3
13	32832-18000*	Interlock Plunger	2
14	32830-18000*	Check Ball Spring	3
15	32154-H7200	Check Spring Spacer	1
16	32834-H7200	Check Ball Plug	3
17	32892-H7200	Striking Rod	1
18	32896-H7200	Striking Lever	1
19	32917-H7200	Lock Pin	1
20	08915-1362A*	Lock Washer	1
21	08915-5361A*	Washer	1
22	08911-20610*	Nut	1
23	32850-H5200	Striking Rod Guide Assy	1
24	32845-24900	Striking Rod Retaining Pin	NLA
25	32858-U6702*	'O' Ring Cap	1
26	32858-14600*	Striking Rod 'O' Ring	1
27	32846-24900*	'E' Ring	1
28	32847-24901*	Stopper Pin	1
29	32848-24900*	'O' Ring	1
30	00933-32810*	Expansion Plug	1
31	32851-24900*	Return Spring Plunger	1
32	32852-24901*	Return Spring	1
33	32856-24901*	Reverse Check Spring	1
34	32853-E9300*	Return Plug	1
35	32841-H1011*	Control Lever	1
36	32854-24900*	'E' Ring	1
37	32849-H1010*	Pin	1
38	32855-H1010*	Bushing	2
39	32861-N4200	Bushing / Lower	1
40	32862-G1200*	Boot	1
41	NPN	Shift Knob	1

FS5C71A TRANSMISSION HOUSING

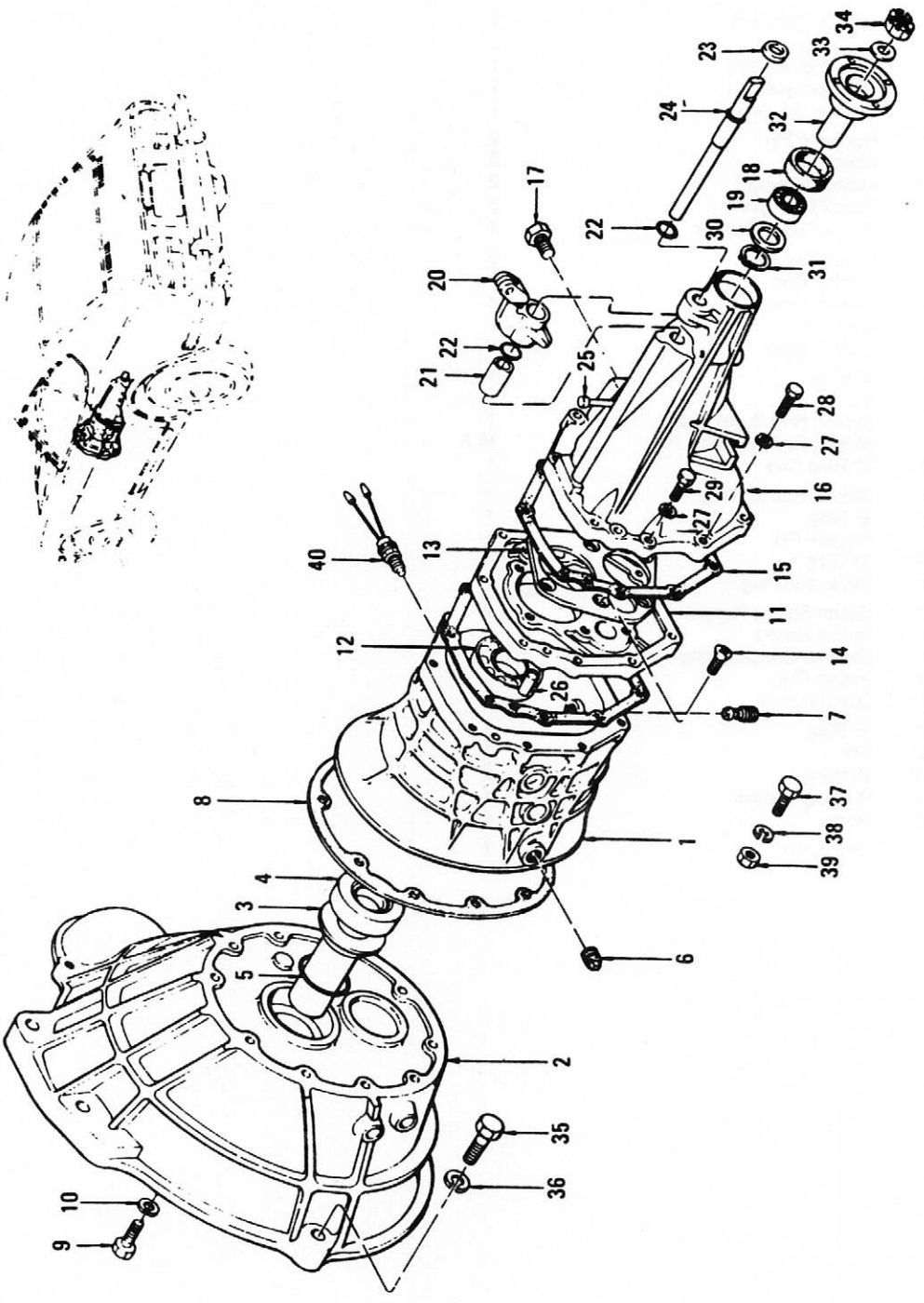

FS5C71A TRANSMISSION HOUSING (EARLY STYLE O/D 5-SPD)

ITEM	PART NUMBER	PART NAME	QTY
1	32101-P0701*	Transmission Case	1
2	30401-22010	Clutch Housing (Z)	1
	30401-78201*	Clutch Housing (SRL)	1
3	32110-78000*	Front Cover	1
4	32114-Y4000*	Front Cover Oil Seal	1
5	*32115-20100**	*Front Cover 'O' Ring*	*1*
6	38357-E4600*	Filler Plug	1
7	32103-U8401*	Drain Plug	1
8	32118-78000*	Gasket	1
9	08120-8321A*	Bolt (Case to Clutch Housing)	10
10	08915-23810*	Lock Washer	10
11	32138-78000*	Adapter Plate	1
12	32273-04100*	Main Shaft Brng	1
13	32139-20100*	Main Shaft Brng Retainer	1
14	08320-82012*	Screw	6
15	32134-78000*	Gasket	1
16	32130-A7100	Tail Housing (Z)	1
	32130-25500*	Tail Housing (SRL)	1
17	00933-20570*	Plug	2
18	32136-20100*	Oil Seal	1
19	32203-14360*	Tail Housing Brng	1
20	32844-25500*	Control Arm	1
21	32887-18800*	Striking Rod Bushing	1
22	32845-18800*	Control Arm 'O' Ring	2
23	32857-14600*	'O' Ring	1
24	32858-14600*	Striking Rod 'O' Ring	1
25	38322-N0100	Breather Assy	1
26	32106-20100*	Dowel Pin	2
27	08915-33810*	Lock Washer	8
28	08130-8501A*	Bolt (Case to Tail Housing)	4
29	08130-86510	Bolt (Case to Tail Housing)	4
30	32144-25500*	Spacer	1
31	32228-20103*	Snap Ring (1.4mm)	1
32	32140-20100*	Flange Assy	1
33	32248-25500*	Washer	1
34	08912-85010*	Nut (Z)	1
	08911-05010*	Nut (SRL)	1
	00921-43510*	Cotter Pin (SRL)	1
35	08131-0601A*	Bolt (Transmission to Engine)	4
36	08915-2402A*	Lock Washer	4
37	32055-47600*	Bolt	2
38	08915-13810	Lock Washer	2
39	08911-1081A*	Nut	2
40	32005-K1004*	Reverse Lamp Switch	1

FS5C71A TRANSMISSION GEARS

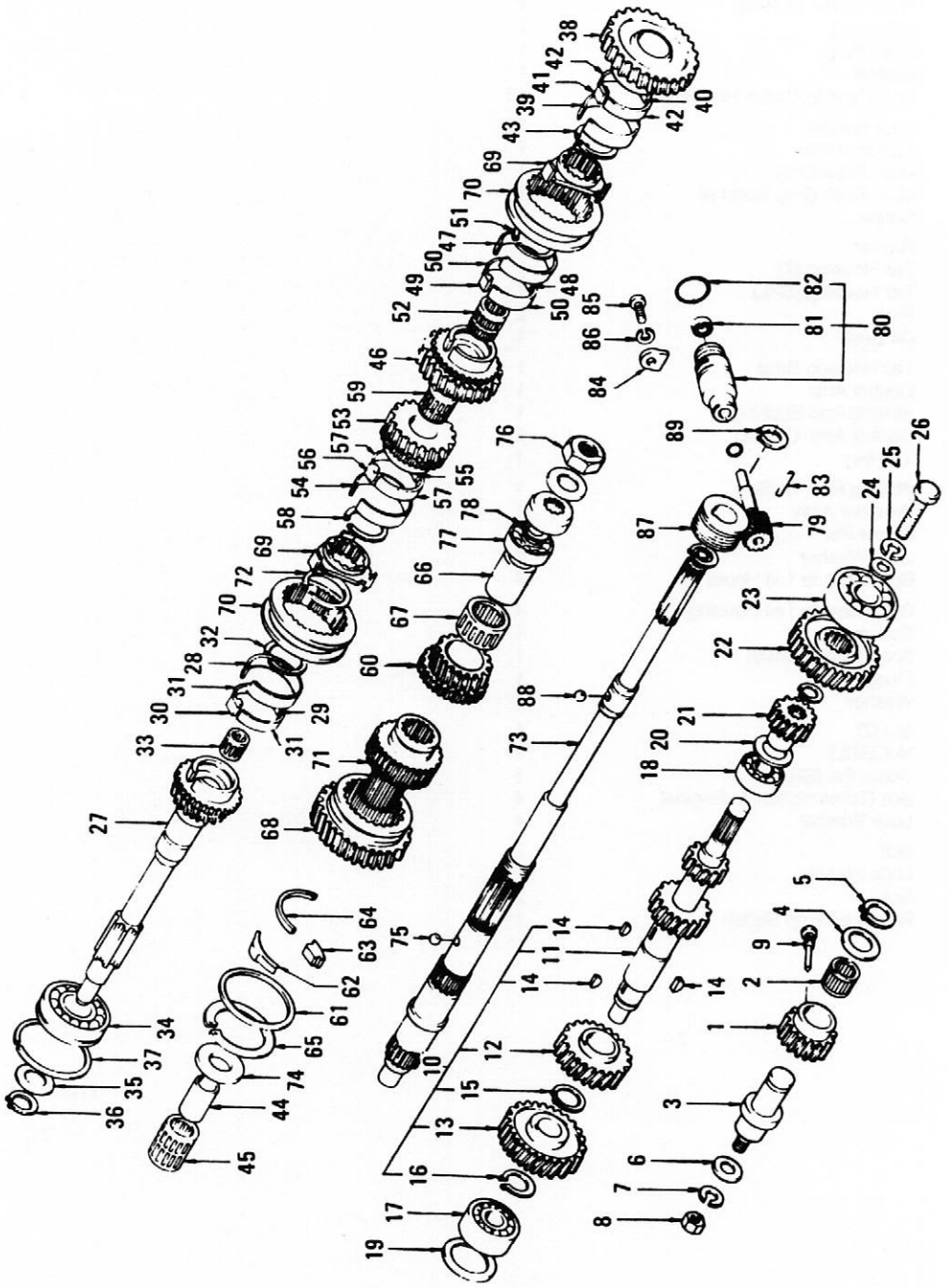

FS5C71A TRANSMISSION GEARS (EARLY STYLE O/D 5-SPD)

ITEM	PART NUMBER	PART NAME	QTY
1	32282-78010*	Reverse Idler Gear (17t)	1
2	32272-36910*	Needle Brng	1
3	32281-78010*	Reverse Idler Shaft	1
4	32284-78000*	Reverse Thrust Washer	2
5	32285-20100*	Reverse Idler Snap Ring	1
6	32294-78010*	Washer	1
7	08915-14410*	Lock Washer	1
8	08911-3441A*	Reverse Idler Shaft Nut	1
9	32290-78000*	Reverse Idler Set Screw	1
10	32210-25501	Counter Shaft Assy	1
11	32212-25501*	Counter Shaft (14t/19t)	1
	32212-25500	M/C Counter Shaft (15t/20t)	1
	32212-25502	U/C Counter Shaft (19t/22t)	1
12	32216-78010*	3rd Gear / Counter Shaft (26t)	1
	32216-25500	M/C 3rd Gear / Counter Shaft (27t)	1
	32216-25502	U/C 3rd Gear / Counter Shaft (27t)	1
13	32200-78050*	Counter Shaft Drive Gear (23t)	1
14	00926-51600*	Woodruff Key	4
15	00922-13200*	Snap Ring	1
16	00922-12800*	Snap Ring	1
17	32273-14360*	Counter Shaft Brng / Front	1
18	32203-E0100*	Counter Shaft Brng / Rear	1
19	32224-20100*	Counter Shaft Brng Ring	1
20	32218-20100*	Shim (1.0mm)	A/R
	32218-20101*	Shim (0.9mm)	A/R
	32218-20102*	Shim (0.8mm)	A/R
	32218-20103*	Shim (0.7mm)	A/R
	32218-20104*	Shim (0.6mm)	A/R
	32218-20105*	Shim (0.5mm)	A/R
	32218-20106*	Shim (0.4mm)	A/R
21	32220-25500*	Reverse Gear / Counter Shaft (25t)	1
22	32310-25500*	5th Gear / Counter Shaft (30t)	1
23	32319-N4800*	Brng / Counter Shaft	1
24	01311-01091*	Washer	1
25	08915-2402A*	Lock Washer	1
26	32236-25500*	Bolt	1
27	32200-25550*	Main Drive Gear Assy (Includes #13)	1
28	32611-14600	Synchro Ring	1
29	32612-14603*	Thrust Block	1
30	32613-14601*	Anchor Block	1
31	32614-14600*	Brake Band	2
32	32616-14600*	Circlip	1
33	32272-36900*	Main Shaft Pilot Brng	1
34	32273-04100*	Main Drive Brng	1
35	32205-78000*	Main Drive Brng Spacer	1
36	32204-78000*	Snap Ring (1.80mm)	A/R
	32204-78001*	Snap Ring (1.87mm)	A/R
	32204-78002*	Snap Ring (1.94mm)	A/R
	32204-78003*	Snap Ring (2.01mm)	A/R
	32204-78004*	Snap Ring (2.08mm)	A/R
37	32207-20100*	Brng Ring (1.2mm)	A/R
	32207-20101*	Brng Ring (1.4mm)	A/R
	32207-20102*	Brng Ring (1.6mm)	A/R
38	32242-25525*	1st Gear / Main Shaft (34t)	1
	32242-25510	M/C 1st Gear / Main Shaft (33t)	NLA
	32242-25512	U/C 1st Gear / Main Shaft (29t)	1
39	32611-14600	Synchro Ring	1
40	32617-14610*	Thrust Block	1
41	32613-14601*	Anchor Block	1
42	32614-14600*	Brake Band	1

ITEM	PART NUMBER	PART NAME	QTY
43	32616-14600*	Circlip	1
44	32253-14601*	Bushing / Main Shaft	1
45	32264-14600*	Needle Brng	1
46	32250-25501*	2nd Gear / Main Shaft (29t)	1
	32250-25500	M/C 2nd Gear / Main Shaft (28t)	1
	32250-25502	U/C 2nd Gear / Main Shaft (25t)	NLA
47	32611-14600	Synchro Ring	1
48	32612-14603*	Thrust Block	1
49	32613-14601*	Anchor Block	1
50	32614-14600*	Brake Band	2
51	32616-14600*	Circlip	1
52	32264-14600*	Needle Brng	1
53	32260-25501*	3rd Gear / Main Shaft (28t)	1
	32260-25500	M/C 3rd Gear / Main Shaft (28t)	1
	32260-25502	U/C 3rd Gear / Main Shaft (27t)	1
54	32611-14600	Synchro Ring	1
55	32612-14603*	Thrust Block	1
56	32613-14601*	Anchor Block	1
57	32614-14600*	Brake Band	2
58	32616-14600*	Circlip	1
59	32264-14600*	Needle Brng	1
60	32340-25501*	5th Gear / Main Shaft (21t)	1
61	32361-20100*	Synchro Ring	1
62	32362-20100*	Thrust Block	1
63	32363-20100*	Anchor Block	1
64	32364-20100*	Brake Band	1
65	32366-20100*	Circlip	1
66	32349-E9800*	Bushing	1
67	32350-25510*	Needle Brng	1
68	32245-25500*	Reverse Gear / Main Shaft (36t)	1
69	32601-14600*	Synchro Hub (1st/2nd & 3rd/4th)	2
70	32606-14600	Coupling Sleeve (1st/2nd & 3rd/4th)	2
71	32258-25500*	Synchro (5th/Rev)	1
72	32263-14601*	Snap Ring	A/R
	32263-14602*	Snap Ring	A/R
	32263-14603*	Snap Ring	A/R
73	32241-A0200	Main Shaft (Z)	1
	32241-25500*	Main Shaft (SRL)	1
74	32246-78000*	Main Shaft Thrust Washer	1
75	32247-20100*	Main Shaft Thrust Washer Ball	1
76	32354-25501*	Nut	1
77	32203-14360*	Brng / Main Shaft	1
78	32228-20100*	Snap Ring (1.1mm)	1
79	32703-78100	Speedo Pinion (16t)	1
	32703-78101	Speedo Pinion (17t)	1
	32703-78102	Speedo Pinion (18t)	1
	32703-78103	Speedo Pinion (19t)	1
	32703-78104*	Speedo Pinion (20t)	1
	32703-86401	Speedo Pinion (21t)	1
	32703-86402	Speedo Pinion (22t)	1
	32703-86403	Speedo Pinion (23t)	1
80	32707-78000*	Sleeve Assy (16t/19t)	1
	32707-66300	Sleeve Assy (20t/23t)	1
81	32709-14600*	Oil Seal	1
82	32710-14600*	'O' Ring	1
83	32873-14600*	Retaining Pin	1
84	32718-14601*	Lock Plate	1
85	08110-61211*	Bolt	1
86	08915-1362A*	Lock Washer	1
87	32701-E9800*	Drive Gear (6t)	1
88	32720-36900*	Steel Ball	1
89	32228-20100*	Snap Ring (1.1mm)	A/R
	32228-20101*	Snap Ring (1.2mm)	A/R
	32228-20102*	Snap Ring (1.3mm)	A/R
	32228-20103*	Snap Ring (1.4mm)	A/R

FS5C71A TRANSMISSION SHIFT MECHANISM

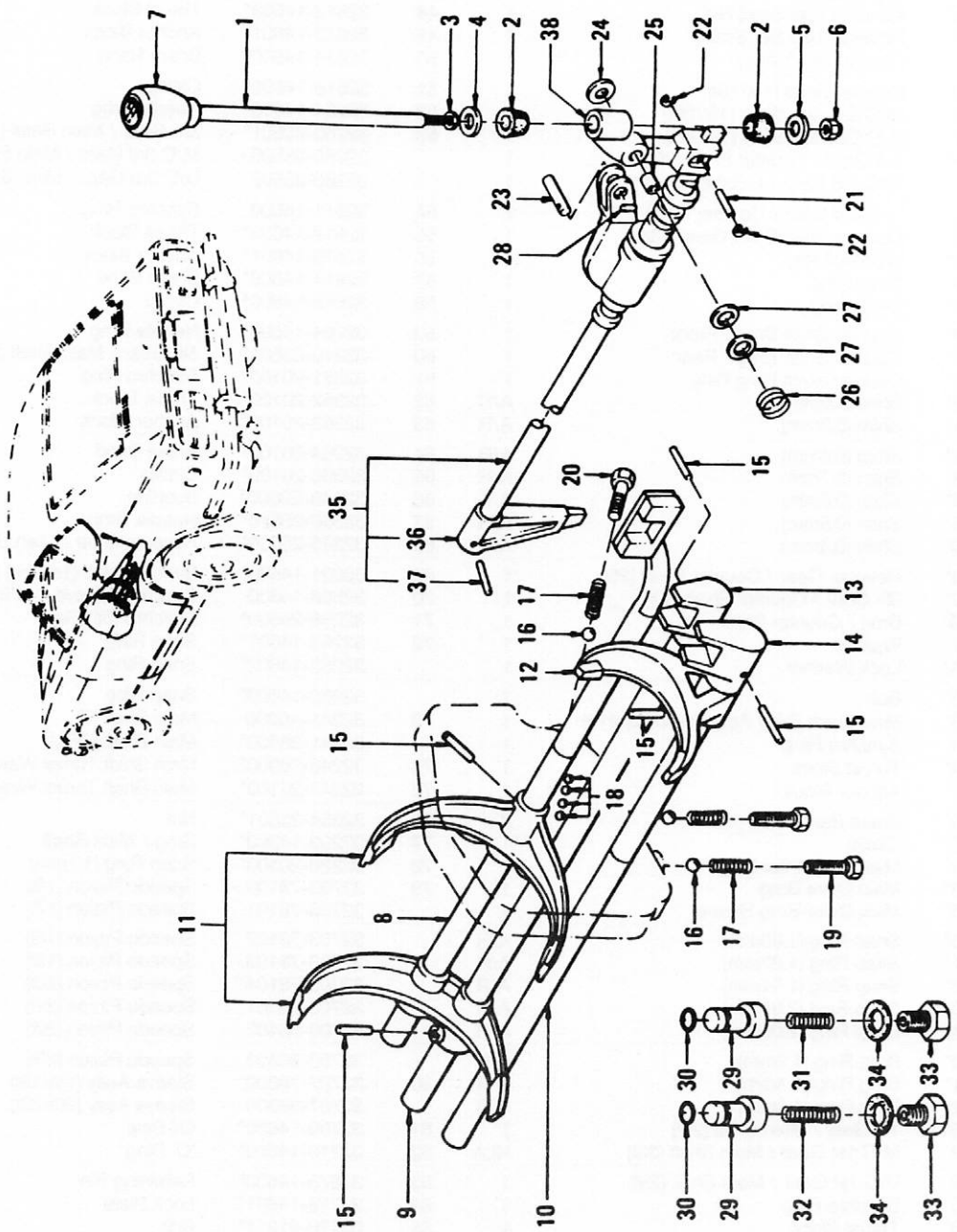

FS5C71A TRANSMISSION SHIFT MECHANISM (EARLY STYLE O/D 5-SPD)

ITEM	PART NUMBER	PART NAME	QTY
1	32841-25500*	Control Lever	1
2	32853-22000*	Bushing	2
3	32855-A7100*	Washer	1
4	32885-22001*	Washer / Upper	1
5	32886-22000*	Washer / Lower	1
6	08912-5401A*	Nut	1
7	NPN	Shift Knob	1
8	32801-25500*	Shift Rod (1st/2nd)	1
9	32809-25500*	Shift Rod (3rd/4th)	1
10	32816-25500*	Shift Rod (5th/Rev)	1
11	32811-78000*	Shift Fork (1st/2nd & 3rd/4th)	2
12	32819-20100*	Shift Fork (5th/Rev)	1
13	32813-20100*	Bracket (3rd/4th)	1
14	32382-20100*	Bracket (5th/Rev)	1
15	32292-1460010*	Retaining Pin	5
	32292-A7610	Opt Retaining Pin	5
16	32829-26760*	Check Ball	3
17	32830-20100*	Check Spring	3
18	32720-36900*	Interlock Ball	4
19	32834-78000*	Check Ball Plug	2
20	32835-78000*	Check Ball Plug	1
21	32877-14600*	Striking Rod Pin	1
22	32878-14600*	'E' Ring	2
23	32849-14600*	Pin	1
24	32888-14600*	Washer	2
25	32889-14600*	Bushing	1
26	32851-14600*	Spring	1
27	01311-01091*	Washer	1
28	32873-14600*	Retaining Pin	1
29	32861-A0100*	Select Pin	2
30	32864-A0100*	'O' Ring	2
31	32845-A0100*	Spring (1st/2nd)	1
32	32846-A0100*	Spring (5th/Rev)	1
33	32862-25500*	Plug	2
34	32863-20100*	Gasket	2
35	32890-A0100*	Striking Rod (Z)	1
	32890-25500*	Striking Rod (SRL)	1
36	32896-25500*	Striking Lever	1
37	32292-1460010*	Retaining Pin	1
	32292-A7610	Opt Retaining Pin	1
38	32843-E4150*	Control Lever Bracket	1
	99996-C3030**	Shift Bushing Kit	1

**The shift bushing kit (9/6-C3030) replaces keys #2, #3, #4, #5 and #6 with special aluminum bushings and washers.

FS5C71B TRANSMISSION HOUSING

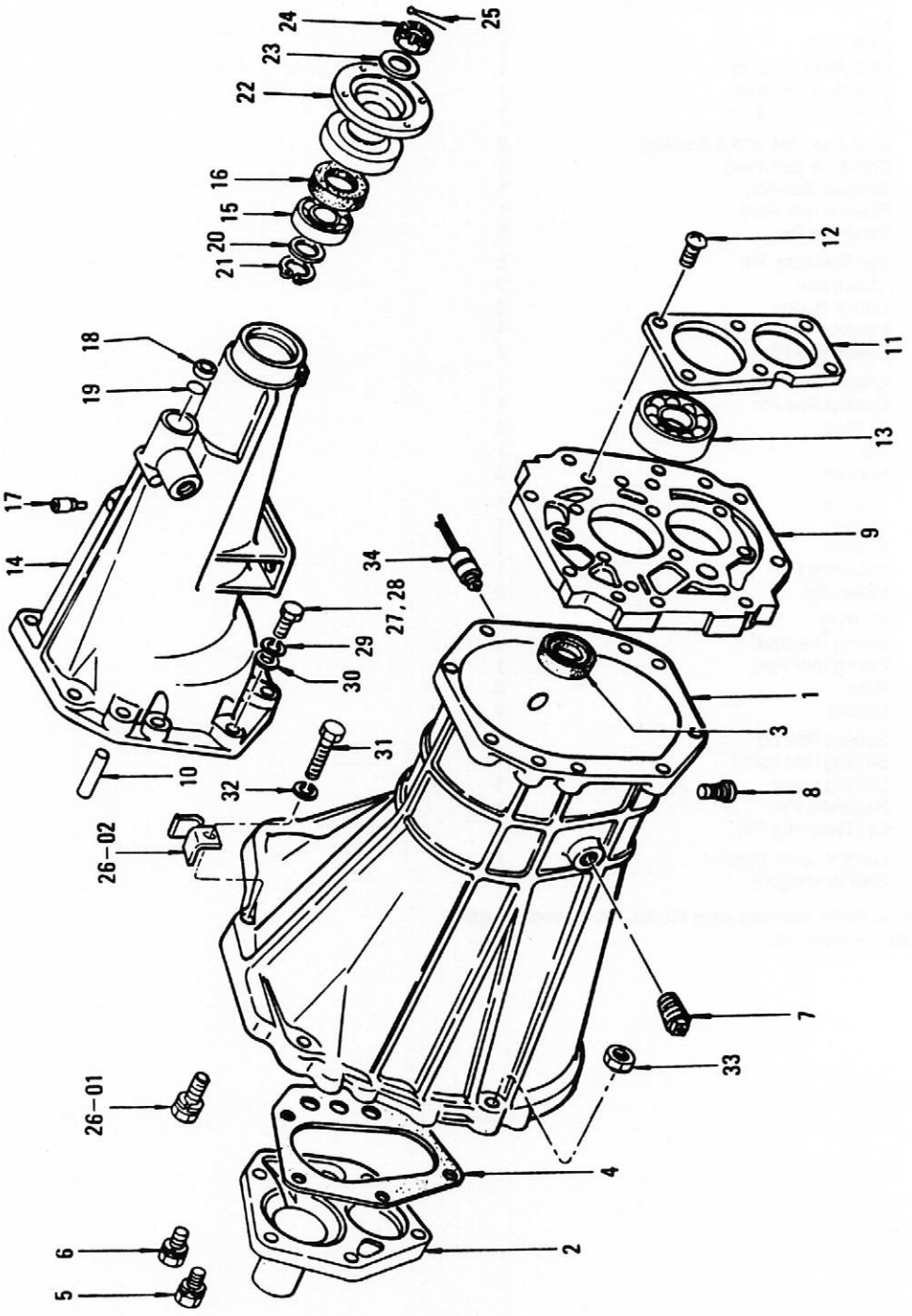

FS5C71B TRANSMISSION HOUSING (LATE STYLE O/D 5-SPD)

ITEM	PART NUMBER	PART NAME	QTY
1	32101-E9017*	Transmission Case	1
2	32111-E9800*	Front Cover	1
3	32114-Y4000*	Front Cover Oil Seal	1
4	32112-E9001*	Front Cover Gasket	1
5	08120-83028*	Bolt	4
6	08120-83562*	Bolt	1
7	38357-E4600*	Filler Plug	1
8	32103-U8401*	Drain Plug	1
9	32138-E9811*	Adapter Plate	1
10	32106-20100*	Dowel Pin	2
11	32139-E9810*	Main Shaft Brng Retainer	1
12	08320-82012*	Screw	6
13	32273-36900*	Main Shaft Brng	1
14	32130-E9500	Tail Housing (Flange Type)	1
	32130-E9401*	Tail Housing (Sleeve Type)	1
15	32203-14360*	Tail Housing Brng	1
16	32136-U0100*	Oil Seal	1
17	38322-N0100	Breather Assy	1
18	32857-14600*	'O'Ring	1
19	32858-14600*	Striking Rod 'O' Ring	1
20	32144-E9500	Spacer (Flange Type)	1
21	32228-E9500	Snap Ring (Flange Type)	1
22	32140-20100*	Flange Assy (Flange Type)	1
23	32248-25500*	Washer (Flange Type)	1
24	08911-95010	Nut (Flange Type)	1
25	00921-44010*	Cotter Pin (Flange Type)	1
26	08120-85028*	Bolt	8
	24210-89957*	Clamp	1
27	32012-A0200	Bolt (Case to Tail Housing)	2
28	08131-28010	Bolt (Case to Tail Housing)	2
	08131-0601A*	Bolt (Case to Tail Housing)	4
29	08915-1421A*	Lock Washer	4
	08915-2402A*	Lock Washer	4
30	08915-44210*	Washer	4
31	08111-03010	Bolt (Transmission to Engine)	5
	08110-8251A*	Bolt (Transmission to Engine)	2
32	08915-2402A*	Lock Washer	5
	08915-13810	Lock Washer	2
33	08911-1081A*	Nut	2
34	32005-K1004*	Reverse Lamp Switch	1

FS5C71B TRANSMISSION GEARS

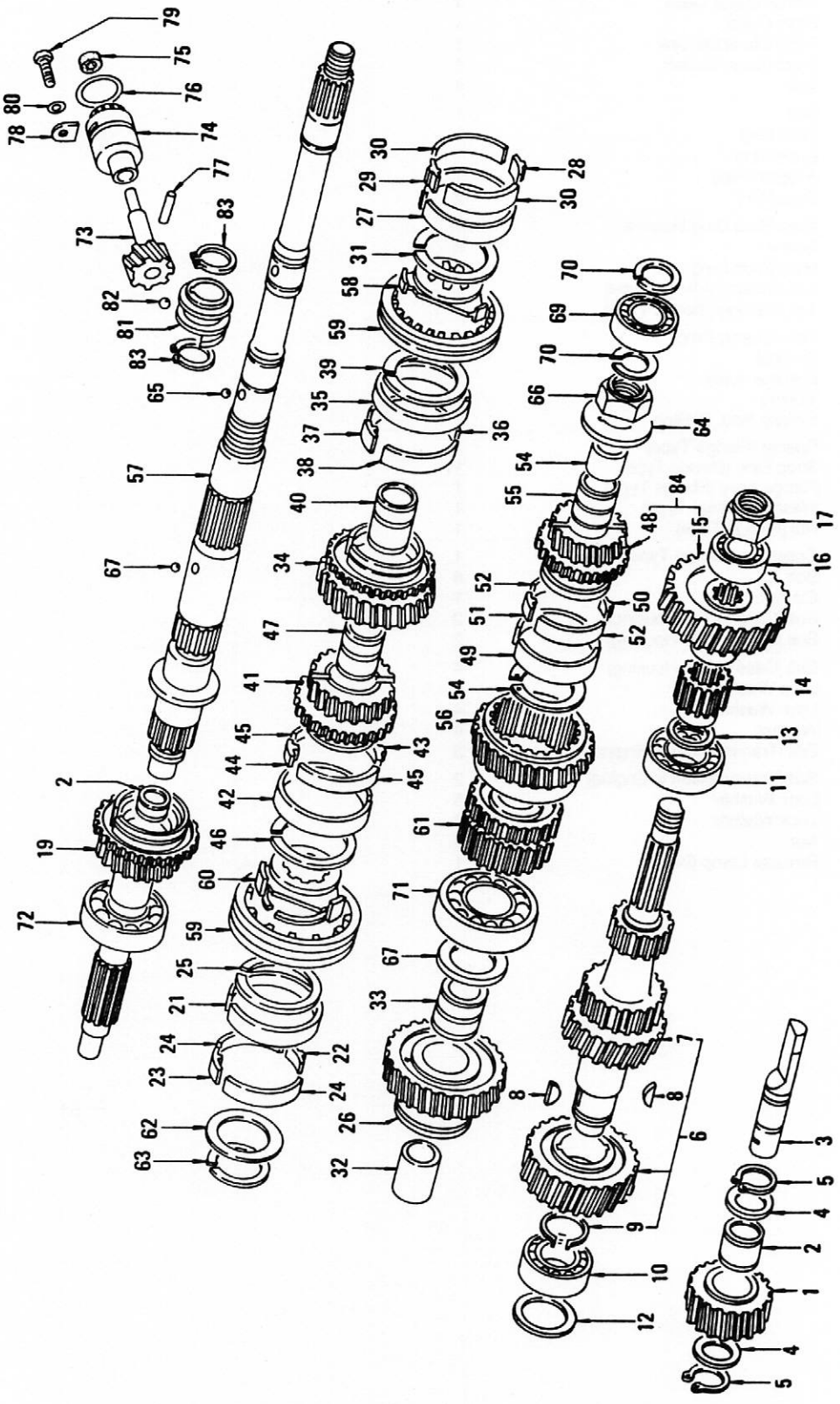

FS5C71B TRANSMISSION GEARS (LATE STYLE O/D 5-SPD)

ITEM	PART NUMBER	PART NAME	QTY
1	32282-E9000*	Reverse Idler Gear (23t)	1
2	32272-36910*	Needle Brng	2
3	32281-E9508*	Reverse Idler Shaft	1
4	32284-E9000*	Thrust Washer	2
5	32285-20100*	Snap Ring	2
6	*32210-E9500*	*C/R Counter Shaft Assy*	*1*
	32210-E9507*	W/R Counter Shaft Assy	1
7	32212-E9500	C/R Counter Gear (16t/20t/28t)	1
	32212-E9507*	W/R Counter Gear (14t/19t/28t)	1
8	32214-E9000*	Woodruff Key	2
9	32215-E9000*	Snap Ring (1.4mm)	A/R
	32215-E9001*	Snap Ring (1.5mm)	A/R
	32215-E9002*	Snap Ring (1.6mm)	A/R
10	32219-E9000*	Counter Shaft Brng / Front	1
11	32203-E9800	Counter Shaft Brng / Rear	1
12	32218-E9000*	Brng Shim (0.1mm)	A/R
	32218-E9001*	Brng Shim (0.2mm)	A/R
	32218-E9002*	Brng Shim (0.3mm)	A/R
	32218-E9003*	Brng Shim (0.4mm)	A/R
	32218-E9004*	Brng Shim (0.5mm)	A/R
	32218-E9005*	Brng Shim (0.6mm)	A/R
13	32221-E9500*	Reverse Gear Spacer	1
14	32220-E9200*	Reverse Gear / Counter Shaft (15t)	1
15	32310-E9500*	5th Gear / Counter Shaft (31t)	1
16	32319-N4800*	Brng / Counter Shaft	1
17	32236-E9500*	Nut	1
18	32200-E9551*	Main Drive Gear Assy (22t/31t)	1
19	32202-E9500	5th Gear / Counter Shaft (22t)	1
20	32217-E9500*	Counter Drive Gear (31t)	1
21	32611-14600	Synchro Ring	1
22	32612-14603*	Thrust Block	1
23	32613-14601*	Anchor Block	1
24	32614-14600*	Brake Band	2
25	32616-14600*	Circlip	1
26	32242-E9500	C/R 1st Gear / Main Shaft (33t)	1
	32242-E9507	W/R 1st Gear / Main Shaft (33t)	1
27	32611-14600	Synchro Ring	1
28	32617-14610*	Thrust Block	1
29	32613-14601*	Anchor Block	1
30	32614-14600*	Brake Band	2
31	32616-14600*	Circlip	1
32	32253-14600*	Bushing / Main Shaft	1
33	32264-14600*	Needle Brng	1
34	32252-E9500	C/R 2nd Gear / Main Shaft (27t)	1
	32252-E9507	W/R 2nd Gear / Main Shaft (28t)	1
35	32611-14600	Synchro Ring	1
36	32612-14603*	Thrust Block	1
37	32613-14601*	Anchor Block	1
38	32614-14600*	Brake Band	1
39	32616-14600*	Circlip	1
40	32264-14600*	Needle Brng	1
41	32262-E9500	3rd Gear / Main Shaft (26t)	1
42	32611-14600	Synchro Ring	1
43	32612-14603*	Thrust Block	1
44	32613-14601*	Anchor Block	1
45	32614-14600*	Brake Band	2
46	32616-14600*	Circlip	1
47	32264-14600*	Needle Brng	1
48	32340-E9500*	5th Gear / Main Shaft (19t)	1
49	32361-20100*	Synchro Ring	1
50	*32362-20100**	*Thrust Block*	1
51	32363-20100*	Anchor Block	1
52	32364-20100*	Brake Band	1
53	32366-20100*	Circlip	1
54	32349-E9800*	Bushing	1
55	32350-25510*	Needle Brng	1
56	32245-E9525*	Reverse Gear / Main Shaft (36t)	1
57	32241-E9500	Main Shaft (Flange Type)	1
	32241-E9400*	Main Shaft (Sleeve Type)	1
58	32601-E9500	Synchro Hub (1st/2nd)	1
59	32606-14600	Coupling Sleeve	1
60	32605-E9500	Synchro Hub (3rd/4th)	1
61	32258-E9500*	Synchro Hub (5th/Rev)	1
62	32207-E9000*	Thrust Washer	1
63	32263-E9000*	Snap Ring (1.4mm)	A/R
	32263-E9001*	Snap Ring (1.5mm)	A/R
	32263-E9002*	Snap Ring (1.6mm)	A/R
64	32352-N4800*	Thrust Washer	1
65	32720-14600*	Steel Ball	1
66	32354-A7400*	Nut	1
67	32246-E9200*	Thrust Washer	1
68	32720-14600*	Steel Ball	1
69	32203-14360*	Brng	1
70	32228-20100*	Snap Ring (1.1mm)	A/R
	32228-20101*	Snap Ring (1.2mm)	A/R
	32228-20102*	Snap Ring (1.3mm)	A/R
	32228-20103*	Snap Ring (1.4mm)	A/R
71	32273-36900*	Main Shaft Brng	1
72	32273-04100*	Main Drive Brng	1
73	32703-78100	Speedo Pinion (16t)	1
	32703-78101	Speedo Pinion (17t)	1
	32703-78102	Speedo Pinion (18t)	1
	32703-78103	Speedo Pinion (19t)	1
	32703-78104*	Speedo Pinion (20t)	1
	32703-86401	Speedo Pinion (21t)	1
	32703-86402	Speedo Pinion (22t)	1
	32703-86403	Speedo Pinion (23t)	1
74	32707-78000*	Sleeve Assy (16t/19t)	1
	32707-66300	Sleeve Assy (20t/23t)	1
75	32709-14600*	Oil Seal	1
76	32710-14600*	'O' Ring	1
77	32873-14600*	Retaining Pin	1
78	32718-14600*	Lock Plate	1
79	08110-61211*	Bolt	1
80	08915-1362A*	Lock Washer	1
81	32701-E9800*	Drive Gear (6t)	1
82	32720-36900*	Steel Ball	1
83	32228-20101*	Snap Ring (1.2mm)	1
84	32310-E9550*	5th Gear Set	1

FS5C71B TRANSMISSION SHIFT MECHANISM

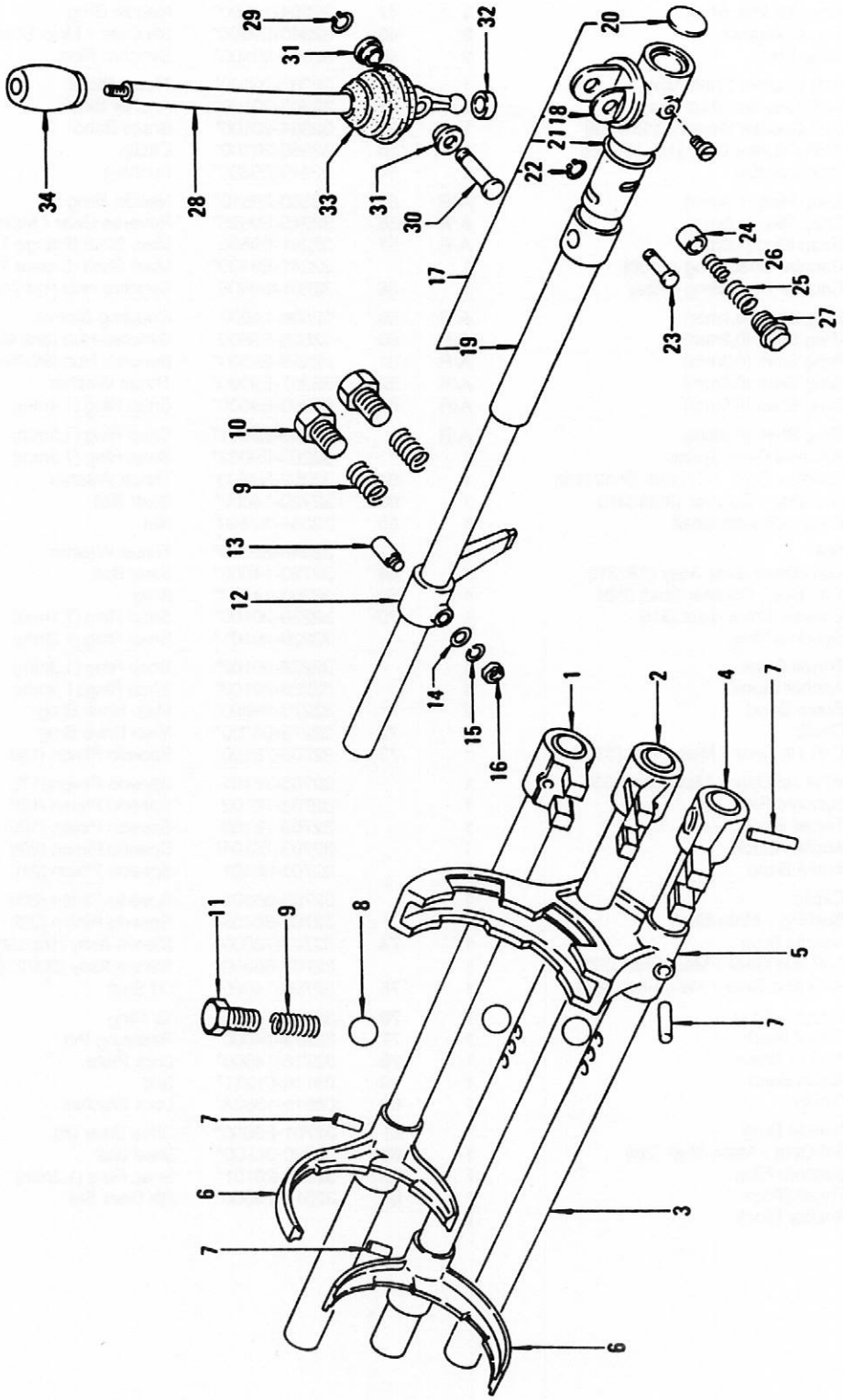

FS5C71B TRANSMISSION SHIFT MECHANISM (LATE STYLE O/D 5-SPD)

ITEM	PART NUMBER	PART NAME	QTY
1	32800-E9500	Shift Rod (1st/2nd)	1
2	32808-E9501	Shift Rod (3rd/4th)	1
3	32816-E9502*	Shift Rod (5th/Rev)	1
4	32382-E9500*	Bracket (5th/Rev)	1
5	32819-E9500*	Shift Fork (5th/Rev)	1
6	32805-E9500	Shift Fork (1st/2nd & 3rd/4th)	2
7	32292-1460010*	Retaining Pin	4
	32292-A7610	Opt Retaining Pin	4
8	32829-26760*	Check Ball	7
9	32830-20100*	Check Spring	3
10	32835-78000*	Check Ball Plug	2
11	32834-E9000*	Check Ball Plug	1
12	32896-E9309*	Striking Lever (Flange Type)	1
	32896-E9500*	Striking Lever (Sleeve Type)	1
13	32917-E9301*	Lock Pin	1
14	08915-5361A*	Washer	1
15	08915-1362A*	Lock Washer	1
16	08911-20610*	Nut	1
17	32850-E9550	Striking Guide Assy (Flange Type)	1
	32850-E9851*	Striking Guide Assy (Sleeve Type)	1
18	32844-E9300*	Striking Rod Guide	1
19	32892-E9502*	Striking Rod	1
20	00933-33000*	Plug	1
21	32710-14600*	'O' Ring	1
22	32846-24900*	Snap Ring	1
23	32847-24901*	Stopper Pin	1
24	32851-24900*	Plunger	1
25	32852-24901*	Spring	1
26	32856-24901*	Spring	1
27	32853-E9300*	Plug	1
28	32841-N3101*	Control Lever	1
29	32854-24900*	'E'Ring	1
30	32849-H1010*	Pin	1
31	32855-H1010*	Bushing	2
32	32861-N4200*	Bushing / Lower	1
33	32862-E9300*	Boot	1
34	NPN	Shift Knob	1

F5C71B TRANSMISSION HOUSING

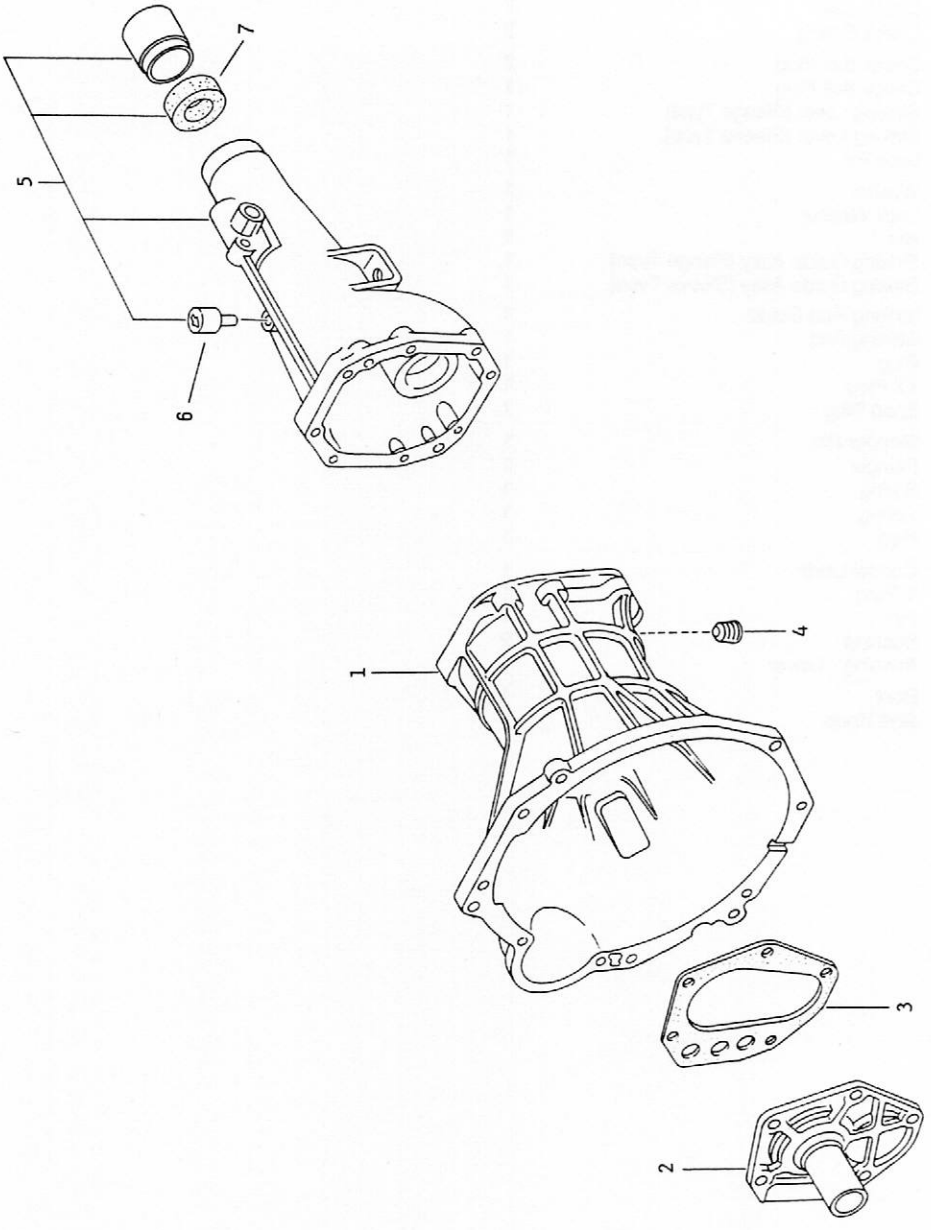

F5C71B TRANSMISSION HOUSING (DIRECT-DRIVE 5-SPD)

ITEM	PART NUMBER	PART NAME	QTY
1	32101-E9017*	Transmission Case	1
2	32111-E9012*	Front Cover	1
3	32112-E9001*	Front Cover Gasket	1
4	32103-U8400*	Drain Plug	1
5	32130-E9401*	Trail Housing	1
6	38322-N0100	Breather Assy	1
7	32136-U0100*	Oil Seal	1

F5C71B TRANSMISSION GEARS

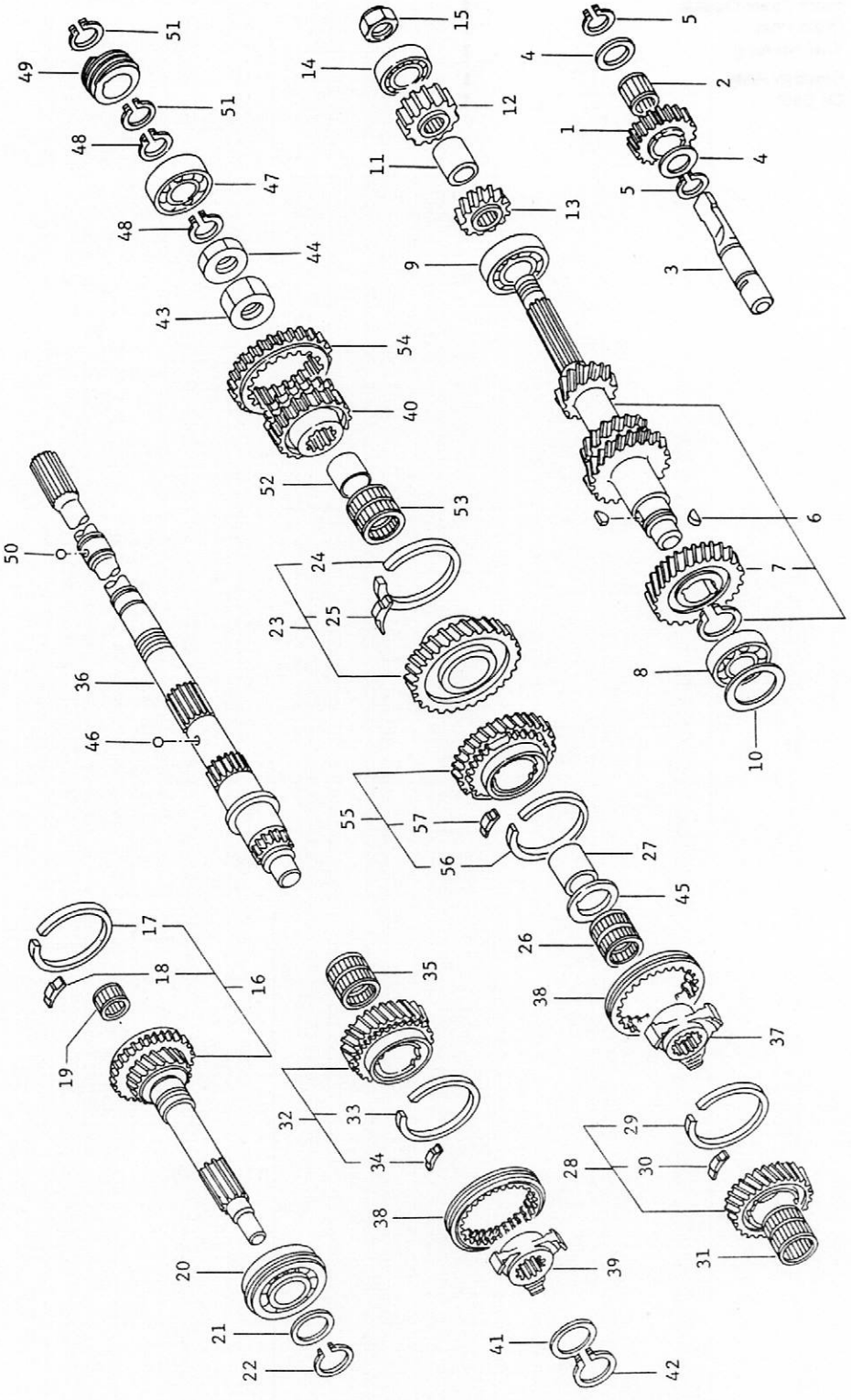

ITEM	PART NUMBER	PART NAME	QTY
1	32282-E9000*	Reverse Idler Gear (23t)	1
2	32272-36910*	Needle Brng	1
3	32281-E9600	Reverse Idler Shaft	1
4	32284-E9000*	Thrust Washer	2
5	32285-20100*	Snap Ring	2
6	32212-E9620	Opt #1 Counter Gear (20t/23t/26t)	1
	32212-E9621	Opt #2 Counter Gear (22t/25t/26t)	1
	32212-E9601	Opt #3 Counter Gear (22t/23t/26t)	1
	32212-E9600	Rally Counter Gear (18t/22t/25t)	1
7	32202-E9500	5th Gear / Counter Shaft (22t)	1
8	32219-E9800	Counter Shaft Brng / Front	1
9	32203-E9800	Counter Shaft Brng / Rear	1
10	32218-E9000*	Brng Shim (0.1mm)	A/R
	32218-E9001*	Brng Shim (0.2mm)	A/R
	32218-E9002*	Brng Shim (0.3mm)	A/R
	32218-E9003*	Brng Shim (0.4mm)	A/R
	32218-E9004*	Brng Shim (0.5mm)	A/R
	32218-E9005*	Brng Shim (0.6mm)	A/R
11	32221-E9600	1st Gear Spacer	1
12	32220-E9600	Reverse Gear / Counter Shaft (29t)	1
13	32310-E9620	Opt #1 1st Gear / Counter Shaft (16t)	1
	32310-E9621	Opt #2 1st Gear / Counter Shaft (18t)	1
	32310-E9601	Opt #3 1st Gear / Counter Shaft (18t)	1
	32310-E9600	Rally 1st Gear / Counter Shaft (14t)	1
14	32319-N4800*	Brng / Counter Shaft	1
15	32236-E9500*	Nut	1
16	32200-E9551*	Main Drive Gear Assy (22t/31t)	1
	32217-E9500*	Main Drive Gear (31t)	1
17	32611-14600	Synchro Ring	1
18	32612-14603*	Thrust Block	1
	32613-14601*	Anchor Block	1
	32614-14600*	Brake Band	1
19	32272-36910*	Needle Brng	1
20	32273-N4800*	Main Drive Brng	1
21	32205-78000*	Spacer	1
22	32204-78000*	Snap Ring (1.80mm)	A/R
	32204-78001*	Snap Ring (1.87mm)	A/R
	32204-78002*	Snap Ring (1.94mm)	A/R
	32204-78003*	Snap Ring (2.01mm)	A/R
	32204-78004*	Snap Ring (2.08mm)	A/R
23	32343-E9620	Opt #1 1st Gear / Main Shaft (32t)	1
	32343-E9621	Opt #2 1st Gear / Main Shaft (30t)	1
	32343-E9611	Opt #3 1st Gear / Main Shaft (28t)	1
	32343-E9610	Rally 1st Gear / Main Shaft (33t)	1
24	32361-20100*	Synchro Ring	1
25	32362-N9200	Thrust Block (Opt #1, #2 & Rally)	1
	32362-20100*	Thrust Block (Opt #3)	1
	32363-20100*	Anchor Block	1
	32364-20100*	Brake Band	1
26	32264-14600*	Needle Brng	1
27	32253-14601*	Bushing / Main Shaft	1
28	32252-E9601	Opt #1/#3 3rd Gear / Main Shaft (24t)	1
	32252-E9621	Opt #2 3rd Gear / Main Shaft (23t)	1
	32252-E9600	Rally 3rd Gear / Main Shaft (25t)	1
29	32611-14600	Synchro Ring	1
30	32612-14603*	Thrust Block	1
	32613-14601*	Anchor Block	1
	32614-14600*	Brake Band	1
31	32264-14600*	Needle Brng	1
32	32262-E9620	Opt #1 4th Gear / Main Shaft (22t)	1
	32262-E9601	Opt #2/#3 4th Gear / Main Shaft (21t)	1
	32262-E9600	Rally 4th Gear / Main Shaft (22t)	1
33	32611-14600	Synchro Ring	1
34	32612-14603*	Thrust Block	1
	32613-14601*	Anchor Block	1
	32614-14600*	Brake Band	1
35	32264-14600*	Needle Brng	1
36	32241-E9610	Main Shaft (Sleeve Type)	1
	32241-E9600	Main Shaft (Flange Type)	1
37	32601-E9500	Synchro Hub (2nd/3rd)	1
38	32606-14600	Coupling Sleeve	1
39	32605-E9500	Synchro Hub (4th/5th)	1
40	32258-E9600	Synchro Hub (Rev/1st)	1
41	32207-E9000*	Thrust Washer	1
42	32263-E9000*	Snap Ring (1.4mm)	A/R
	32263-E9001*	Snap Ring (1.5mm)	A/R
	32263-E9002*	Snap Ring (1.6mm)	A/R
43	32352-N4800*	Thrust Washer	1
44	32354-A7400*	Nut	1
45	32246-E9200*	Thrust Washer	1
46	32720-14600*	Steel Ball	1
47	32203-14360*	Brng	1
48	32228-20100*	Snap Ring (1.1mm)	A/R
	32228-20101*	Snap Ring (1.2mm)	A/R
	32228-20102*	Snap Ring (1.3mm)	A/R
	32228-20103*	Snap Ring (1.4mm)	A/R
49	32701-E9800*	Drive Gear (6t)	1
50	32720-36900*	Steel Ball	1
51	32228-20101*	Snap Ring (1.2mm)	1
52	32349-E9600	Bushing	1
53	32350-25510*	Needle Brng	1
54	32245-E9525*	Reverse Gear / Main Shaft (36t)	1
55	32242-E9620	Opt #1 2nd Gear / Main Shaft (28t)	1
	32242-E9601	Opt #2/#3 2nd Gear / Main Shaft (25t)	1
	32242-E9600	Rally 2nd Gear / Main Shaft (29t)	1
56	32611-14600	Synchro Ring	1
57	32612-14603*	Thrust Block	1
	32613-14601*	Anchor Block	1
	32614-14600*	Brake Band	1

F5C71B TRANSMISSION SHIFT MECHANISM

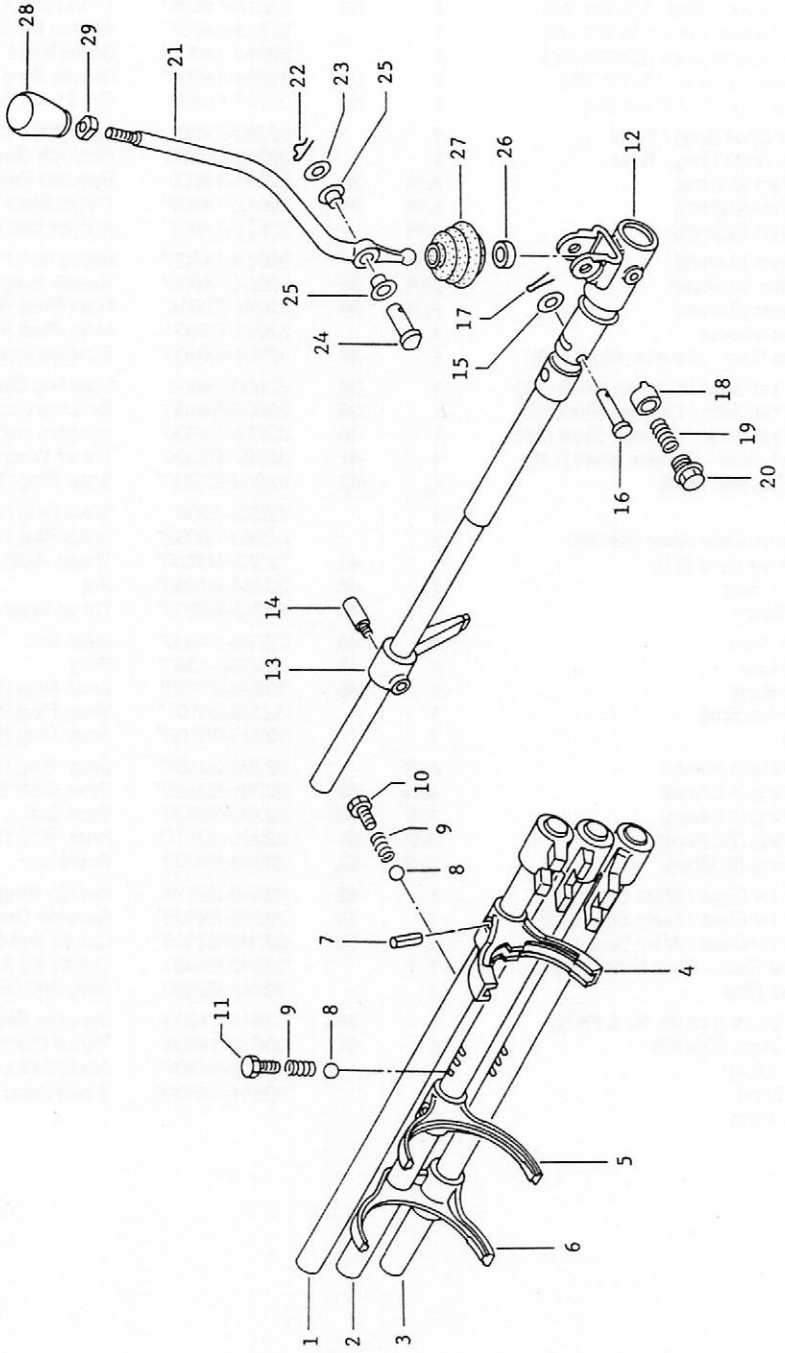

F5C71B TRANSMISSION SHIFT MECHANISM (DIRECT-DRIVE 5-SPD)

ITEM	PART NUMBER	PART NAME	QTY
1	32815-E9600	Shift Rod (Rev/1st)	1
2	32800-A7610	Shift Rod (2nd/3rd)	1
3	32808-A7610	Shift Rod (4th/5th)	1
4	32819-E9600	Shift Fork (Rev/1st)	1
5	32805-E9500	Shift Fork (2nd/3rd)	1
6	32811-E9601	Shift Fork (4th/5th)	1
7	32292-1460010*	Retaining Pin	3
	32292-A7610	Opt Retaining Pin	3
8	32829-26760*	Check Ball	7
9	32830-20100*	Check Spring	3
10	32835-78000*	Check Ball Plug	2
11	32834-E9000*	Check Ball Plug	1
12	32850-A9960	Striking Guide Assy	1
	32850-A1250	Striking Rod Guide	1
13	32896-B3400	Striking Lever	1
14	32917-E9301*	Lock Pin	1
15	32846-B3400	Washer	1
16	32847-B3400	Stopper Pin	1
17	00921-11510*	Clip	1
18	32851-24900*	Plunger	1
19	32852-24901*	Spring	1
20	32853-E9300*	Plug	1
21	32841-N3101*	Control Lever	1
22	32854-24900*	'E' Ring	1
23	NPN	Washer	NLA
24	32849-H1010*	Pin	1
25	32855-H1010*	Bushing	2
26	32861-N4200*	Bushing / Lower	1
27	32862-E9300*	Boot	1
28	NPN	Shift Knob	1
29	32866-B3400	Nut	1
	32382-E9600	Bracket (4th/5th)	1
	32893-E9600	Return Spring	1

R190 L/S DIFFERENTIAL ASSY

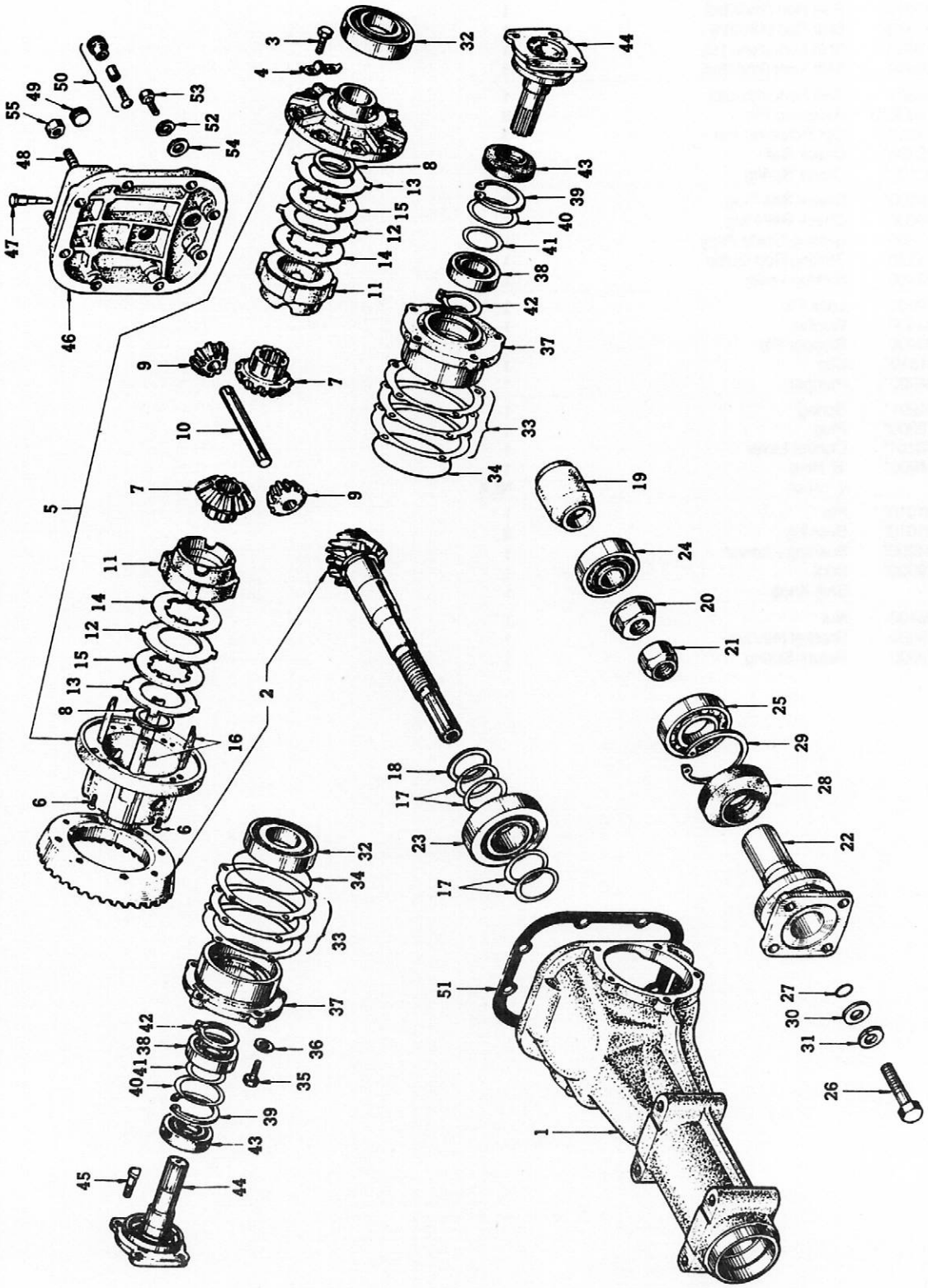

R190 L/S DIFFERENTIAL ASSY

ITEM	PART NUMBER	PART NAME	QTY
1	38311-A0100	Housing	1
2	38100-A0150	3.9 Ring & Pinion Set	1
3	38102-68210	Rear Gear Bolt	8
4	38103-68210	Lock Tab	4
	38420-R1110	Limited-Slip Assy	1
5	38421-A0225	Case Assy	1
6	08320-61212*	Screw	4
7	38423-68210	Side Gear	2
8	38424-68210	Thrust Washer (2.00mm)	A/R
	38424-68211	Thrust Washer (2.15mm)	A/R
9	38425-68200	Pinion Gear	2
10	38427-A0200	Pinion Shaft	1
11	38431-68210	Pressure Ring	2
12	38432-68210	Friction Plate	2
13	38432-A0200	Friction Disc	2
14	38433-68210	Friction Plate (2.0mm)	A/R
15	38433-A0200	Friction Disc	2
16	38437-68210	Case Sleeve	4
17	38125-68200	Brng Shim	A/R
18	38153-68200	Rear Brng Spacer A (2.60mm)	A/R
	38153-68201	Rear Brng Spacer B (2.63mm)	A/R
	38153-68202	Rear Brng Spacer C (2.66mm)	A/R
	38153-68203	Rear Brng Spacer D (2.69mm)	A/R
	38153-68204	Rear Brng Spacer E (2.72mm)	A/R
	38153-68205	Rear Brng Spacer F (2.75mm)	A/R
	38153-68206	Rear Brng Spacer G (2.78mm)	A/R
	38153-68207	Rear Brng Spacer H (2.81mm)	A/R
	38153-68208	Rear Brng Spacer I (2.84mm)	A/R
	38153-68209	Rear Brng Spacer J (2.87mm)	A/R
	38153-68210	Rear Brng Spacer K (2.90mm)	A/R
19	38165-A0100	Pinion Brng Spacer A (58.85mm)	A/R
	38165-A0101	Pinion Brng Spacer B (58.90mm)	A/R
	38165-A0102	Pinion Brng Spacer C (58.95mm)	A/R
	38165-A0103	Pinion Brng Spacer D (59.00mm)	A/R
	38165-A0104	Pinion Brng Spacer E (59.05mm)	A/R
	38165-A0105	Pinion Brng Spacer F (59.10mm)	A/R
	38165-A0106	Pinion Brng Spacer G (59.15mm)	A/R
20	38216-A0101	Pinion Nut	1
21	38216-A0110	Pinion Nut	1
22	38209-A0100	Pinion Flange	1
23	38120-61000	Taper Roller Brng	1
24	38140-A0100	Pinion Brng / Front	1
25	38335-A0100	Pilot Brng / Front	1
26	38230-A0100	Pinion Flange Bolt	1
27	38223-21000*	'O' Ring	1
28	38332-A0100	Oil Seal	1
29	00922-27500	Snap Ring	1
30	08915-55010*	Washer	1
31	08915-2402A*	Lock Washer	1
32	09022-0012P	Taper Roller Brng	2
33	38453-A0100	Side Brng Adj Shim A (0.05mm)	A/R
	38453-A0101	Side Brng Adj Shim B (0.07mm)	A/R
	38453-A0102	Side Brng Adj Shim C (0.10mm)	A/R
	38453-A0103	Side Brng Adj Shim D (0.20mm)	A/R
	38453-A0104	Side Brng Adj Shim E (0.50mm)	A/R
	38453-A0105	Side Brng Adj Shim F (1.00mm)	A/R
34	38343-A0100	'O' Ring	2
35	38226-A0100	Bolt	10
36	08915-13810	Lock Washer	10
37	38341-A0100	Side Brng Retainer	2
38	38440-A0100	Side Flange Pilot Brng	2
39	00922-26200*	Snap Ring	2
40	38455-A0100	Side Brng Retainer Shim A (0.1mm)	A/R
	38455-A0101	Side Brng Retainer Shim B (0.2mm)	A/R
41	38458-A0101	Snap Ring (1.80mm)	2
42	00922-13500	Snap Ring (1.5mm)	2
43	38342-A0100	Side Flange Oil Seal	2
44	38220-A0100	Side Flange	2
45	38228-21000*	Bolt	8
46	38351-A0101	Rear Cover	1
47	38352-A0100	Breather Assy	1
48	08229-23010*	Stud	2
49	00931-21210	Filler Plug	1
50	32103-U8401	Drain Plug	1
51	38353-A0100	Rear Cover Gasket	1
52	08915-2402A*	Lock Washer	8
53	08114-08510*	Bolt	8
54	03121-1000P	Washer	8
55	08912-62110	Nut	2

NOTE; KEY NO. 1, 2 ASS'Y-CYLINDER, FRONT BRAKE
INCLUDES KEY NO. 3 ~ 16

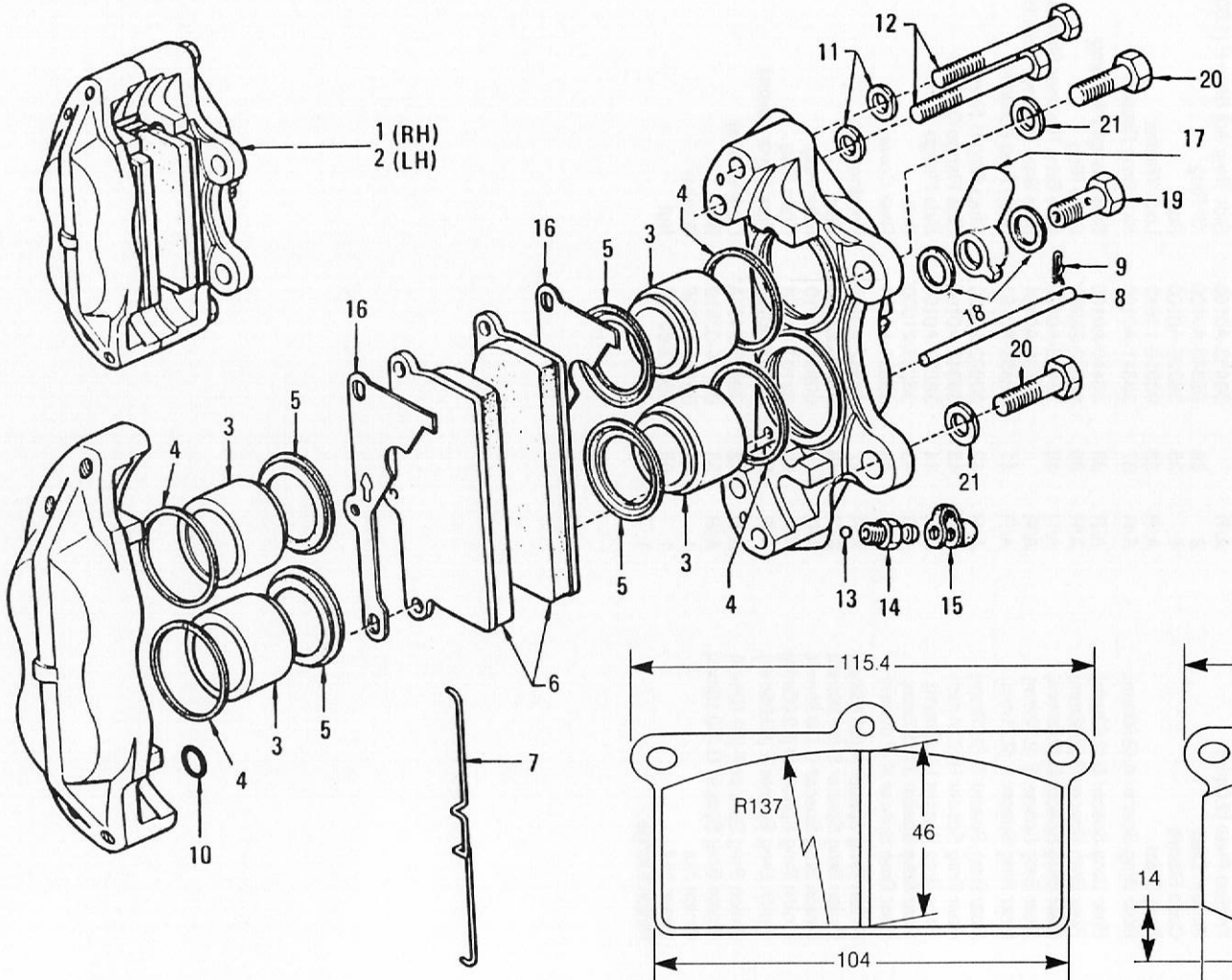

F.I.A. Brake Pad (vented rotor)

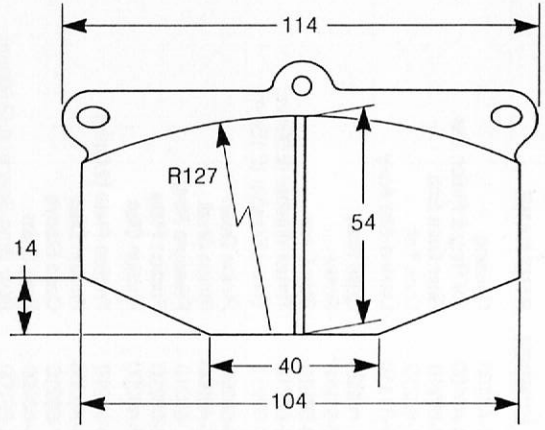

F.I.A. Brake Pad (OE rotor)

FIA BRAKE CALIPER ASSY

ITEM	PART NUMBER	PART NAME	QTY
1	41000-E7201	Caliper Assy/RH (OE Rotor)	1
	41000-A1282	Caliper Assy/RH (Vented Rotor)	1
2	41010-E7201	Caliper Assy/LH (OE Rotor)	1
	41010-A1282	Caliper Assy/LH (Vented Rotor)	1
3	41122-68200	Caliper Piston	8
4	41124-68200	Piston Seal	NLA
5	41127-84000	Dust Seal	8
6	41060-E7201	M59S Brake Pad (OE Rotor)	4
	41060-R1120	M2800 Brake Pad (OE Rotor)	4
	41060-F2025	M33S Brake Pad Set (Vented Rotor)	1
	41060-A1281	M59S Brake Pad (Vented Rotor)	4
	41060-E4622	M2800 Brake Pad (Vented Rotor)	4
	41060-A1282	DS11 Brake Pad (Vented Rotor)	4
7	41080-68200	Retaining Clip (OE Rotor)	4
8	41117-84000	Pin (OE Rotor)	4
	41117-A1280	Pin (Vented Rotor)	4
9	41049-68200	Clip (OE Rotor)	4
	41118-A7610	Clip w/Cable (Vented Rotor)	2
10	41158-68201	Caliper Seal	4
11	08915-2402A*	Lock Washer	8
12	41149-84000	Bolt (Vented Rotor)	8
13	41126-14600*	Steel Ball	2
14	41128-A1280	Bleed Screw	2
15	41129-A2410*	Bleed Screw Cap	2
16	41079-68200	Shim (OE Rotor)	4
17	41130-B0700	Fitting (OE Rotor)	2
	41205-F1800	Fitting (Vented Rotor)	2
18	46237-A4600	Gasket	6
19	41128-G0310	Bolt (OE Rotor)	2
	41128-F1800	Bolt (Vented Rotor)	2
20	40057-21000	Caliper Bolt (M12x1.25x31.5)	4
21	08915-24410*	Lock Washer	4
22	41120-68225	Repair Kit (Includes #4, #5 & #15)	1

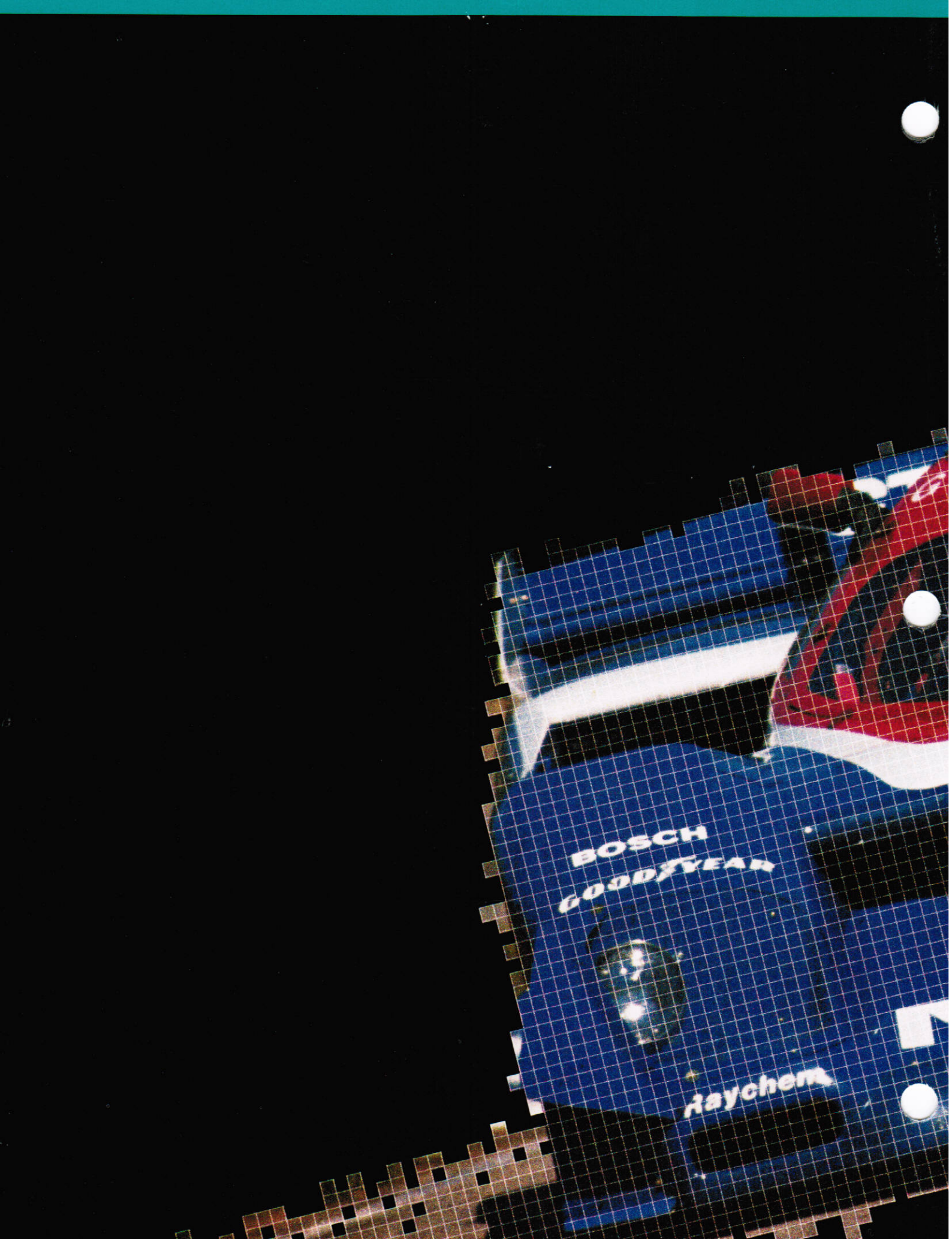
BOSCH
GOODYEAR
Raychem